MITSUBISHI CT-32CW1BD

General Information

Also Covers
CT-32CW1CD

Recommended Safety Parts

Item	Part No.	Description		
	255P813O10	ASSY-ITC	W76EGX023X122	
T 552	334P247O10	TRANS-FLYBACK		
T 901	350P684O10	TRANS-POWER		
	4098139O10	COIL-DEGAUSSING		
	4098143O10	COIL-CANCEL		
R 545	103P390O70	R-FUSE	1/2W 33-J	
R 557	103P442O20	R-FUSE-METAL	1W 560 -K/J	
R 558	103P397O90	R-FUSE	1/2W 0.82-J	
R 560	103P397O90	R-FUSE	1/2W 0.82-J	
R 562	103P398O20	R-FUSE	1/2W 15-J	
R 582	103P398O20	R-FUSE	1/2W 1.5-J	
R 583	103P397O90	R-FUSE	1/2W 0.82-J	
R 609	103P370O10	R-FUSE	1/4W 10-J	
R 612	103P392O50	R-FUSE	1/2W 1K-J	
R 614	103P370O10	R-FUSE	1/4W 10-J	
R 615	103P370O10	R-FUSE	1/4W 10-J	
R 647	103P392O50	R-FUSE	1/2W 1K-J	
R 662	103P370O10	R-FUSE	1/4W 10-J	
R 671	103P438O10	R-FUSE-METAL	2W 1.2-K/J	
R 930	1090021O20	R-COMPOSITION	1/2W 6.8M-K	
R 931	1090021O20	R-COMPOSITION	1/2W 6.8M-K	
R 3530	103P398O80	R-FUSE	1/2W 4.7-J	
R 3531	103P398O80	R-FUSE	1/2W 4.7-J	
R 3540	103P398O80	R-FUSE	1/2W 4.7-J	
R 3541	103P398O80	R-FUSE	1/2W 4.7-J	
R 3550	103P398O80	R-FUSE	1/2W 4.7-J	
R 3551	103P398O80	R-FUSE	1/2W 4.7-J	
R 3560	103P398O80	R-FUSE	1/2W 4.7-J	
R 3561	103P398O80	R-FUSE	1/2W 4.7-J	
R 5352	103P398O80	R-FUSE	1/2W 4.7-J	
R 5355	103P392O50	R-FUSE	1/2W 1K-J	
R 5356	103P392O20	R-FUSE	1/2W 560J	
C 918	189P094O20	C-C-AC	ACT4K E3300pF-M	
C 990	189P117O30	C-M-P-AC	AC250V 0.22uF-M	
C 991	189P117O30	C-M-P-AC	AC250V 0.22uF-M	
C 992	189P117O30	C-M-P-AC	AC250V 0.22uF-M	
C 993	189P117O20	C-M-P-AC	AC275V 0.luF-M	
J 651	449C113O10	SOCKET-CRT		
S 991	432C074O40	SW-PUSH		
F 991	2830047O40	FUSE	T2A	BD
F 991	2830091O60	FUSET	3.15AH 250V	CD
K 901	287P049O30	RELAY-POWER		
K 902	287P049O50	RELAY-POWER		
PC951	268P068O10	PHOTO-COUPLER	TCDT1124G	
RP901	265P047O60	POSISTOR	PTH451A102BF140M270A	
Z 550	299P192O70	PROTECTOR	1000	
Z 551	299P193O70	PROTECTOR	5000	
Z 552	299P193O40	PROTECTOR	3150	
Z 950	299P193O70	PROTECTOR	5000	
Z 951	299P193O70	PROTECTOR	5000	
Z 952	299P193O70	PROTECTOR	5000	
Z 953	299P193O70	PROTECTOR	5000	
Z 954	299P200O50	PROTECTOR	630	
Z 9X1	299P193O70	PROTECTOR	5000	
Z 9X2	299P193O70	PROTECTOR	5000	
Z 9X3	299P193O70	PROTECTOR	5000	
Z 9X4	299P193O70	PROTECTOR	5000	
	921C126O01	ASSY-PCB-AV		
	921C127O01	ASSY-PCB-PIP		
	921C128O01	ASSY-PCB-MGV		
	921C130O01	ASSY-PCB-MSP/DSP		
	921C131O01	ASSY-PCB-TEXT		
	921C132O01	ASSY-PCB-VIF		
	921C134O01	ASSY-PCB-DBF		
	921C136O01	ASSY-PCB-SVM		
	921C137O01	ASSY-PCB-CRT		
	921C138O01	ASSY-PCB-CONTROL		
	921C140O01	ASSY-PCB-AMP		
	921C141O01	ASSY-PCB-POWER-SUB		CD
	921C141O02	ASSY-PCB-POWER-SUB		BD
	9306746O01	ASSY-PCB-SIGNAL		
	9308747O01	ASSY-PCB-POWER		
	246C022O70	AC-POWER-CORD		CD
	246C162O10	AC-POWER-CORD		BD

Adjustments

1.6.2 Lead dressing
• Leads must be dressed as shown in table 1 .4B and the diagram (fig. 1 .4C).
• The leads are routed or clamped so that they do not come close to any heat generating or high-tension parts.
• The anode lead wire is routed such that no tension is applied to the anode cap. If the angle and the route of the anode lead wire is changed, return it to the initial angle and route.

Fig 2.1A The remote control buttons used in Line Mode:

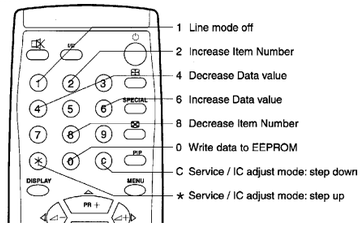

LEAD WIRE	CLAMP No.	LEAD WIRE	CLAMP No.	LEAD WIRE	CLAMP No.
Anode lead	6-38 (loop x1)	DF	27-7-26-29-28	HN	4-15-16
Focus lead	31-36-35	DG	12	KA	32
Screen lead	31-36-35	DJ	(none)	KB	18
SP391	9-8-7-5-4-3	DH	12	KF	34-33-29-26
SP392	1-3 (loop x 3)	DK	12	KH	11-20-19
SP393	10	DL	12	KM	13-14-15-16
SP394	1-2	DV	27-30	LB	28-33-34
CE	21-24-16	DY	7-27-30	LE	37
CH	41-40-23-24	GA	24-23-40-35-36	LG	37
CJ	22-39	GL	(none)	LH	37
CK	28-41	HA	13-14	PC	17-16-5
DB	30-25-16-24	HJ	13-14	SA	(none)
DD	(none)	HL	24-16		

table 1.4B

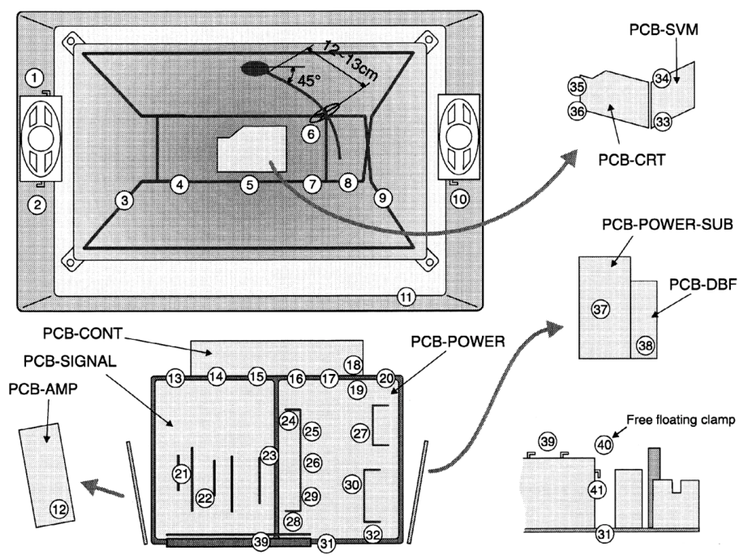

fig 1.4C

2 SERVICE ADJUSTMENT PROCEDURES

2.1 INTRODUCTION
Most service adjustments are made using the remote control unit (fig 2.1A) with the TV in "Line Mode". Line mode consists of a series of Service modes and IC adjustments:

SERVICE MODES	IC ADJUSTMENTS
DEFLECTION CIRCUIT ALIGNMENT	PIC
FOCUS ALIGNMENT	FMX
SCREEN BIAS ALIGNMENT	CSG
CUT OFF PRESET	MSG
VIDEO CIRCUIT ALIGNMENT – 1	RGB
WHITE ALIGNMENT (PAL)	DFL
WHITE ALIGNMENT (SECAM)	MSD
VIDEO CIRCUIT ALIGNMENT – 2	PIP
HORIZONTAL BACKGROUND POSITION ALIGNMENT	MSD2
PIP ALIGNMENT	

Fig 2. 1B Line Mode on-screen displays:

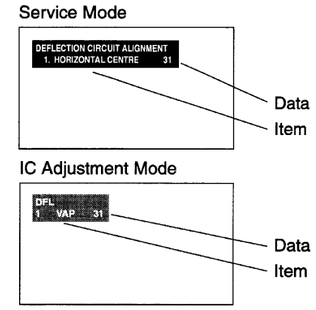

2.2 BASIC ADJUSTMENT PROCEDURE
2.2.1 Activating Line Mode
Press the MENU button on a remote control then press buttons 2, 3, 5 and 7 in that order within 4 seconds. (The screen will change to the Line Mode display.)

2.2.2 Selecting a Service Mode or IC Adjustment
Press the * or C button on the remote control to step through the various service modes or IC adjustments.

2.2.3 Selecting and adjusting a Service or IC Adjustment Item
1. Press the 2 or 8 button to select a specific adjustment item: 2 = step up, 8 = step down.
2. Press the 4 or 6 button to change data value: 4 = decrease adjustment data, 6 = increase adjustment data.
3. Press the 0 button to save the data to the EEPROM memory. The display of characters goes red for approximately three seconds in this step.

Note: If the line mode is terminated without pressing the 0, changes in data are not saved.

2.2.4 Terminating Line Mode
Press the 1 button on the remote control to terminate line mode. Line mode can also be terminated by turning the power off.

2.3 REPLACING THE EEPROM (IC702)
The EEPROM (IC702) stores the data specified in Line Mode. When the EEPROM is replaced all the data is initialized. After replacement check the data is as shown in the Line Mode Data Table.
Data in brackets ( ) are default values. The data should be adjusted according to the adjustments specified in procedures 2.4 to 2.8. Other data values need not be changed.

LINE MODE DATA TABLES - SERVICE MODES: See Next Page.

2.4 VIF CIRCUIT
2.4.1 RFAGC
Conduct this adjustment for all the channels to be received (field strength ≥75dBu at 75Ohms load).
The adjustment is necessary both for the main picture and the sub-picture in this model.
1. Supply an RF signal (off-air program).
2. Set the BOOSTER condition to ON in the MANUAL PRESET menu.
3. Turn on AFT.
4. Observe the main picture.
5. Adjust VR101 so that the picture and the sound have no beat, noise or intermodualtion distortion.
6. Activate PIP and display the program on sub picture screen.
7. Observe the sub picture
8. Adjust VR7101 so that the picture has no beat, noise or intermodulation distortion.

2.5 DEFLECTION CIRCUITS - STAGE 1
2.5.1 Horizontal Centring
1. Supply a VIDEO signal (monoscope).
2. Set the picture format to 16:9.
3. Press the MENU button on the remote control (the MENU display will appear.) then press buttons 2, 3, 5 and 7 in that order within 4 seconds. (The MENU display will change to the Line Mode display.)
4. Select the DEFLECTION CIRCUIT ALIGNMENT (* or C button).
5. Select item 1 — Horizontal Centre (2 or 8 button).
6. Adjust the data so that the positions of the left and right markers are the same. (4 or 6 button).
7. Write the data into memory (0 button).
8. Terminate line mode (1 button).

Note: this adjustment is made with the picture format set to 16:9. Adjustment in other picture formats is not necessary.

2.5.2 Horizontal Width
1. Supply a VIDEO signal (monoscope).
2. Set the picture format to 16:9
3. Press the MENU button on the remote control (the MENU display will appear.) then press buttons 2, 3, 5 and 7 in that order within 4 seconds. (The MENU display will change to the Line Mode display.)
4. Select the DEFLECTION CIRCUIT ALIGNMENT (* or C button).
5. Select item 2 — Horizontal Width (2 or 8 button).
6. Adjust the data so that the sum of the markers is 2.8±0.2 (equivalent to 8±1% overscan).
7. Write the data into the memory (0 button).
8. Terminate line mode (1 button).

Note: the adjustment is made with the picture format set to 16:9 Adjustment in any other picture format is not necessary.

2.5.3 Side PCC
1. Supply a VIDEO signal (crosshatch).
2. Set the picture format to 16:9.
3. Press the MENU button on the remote control (the MENU display will appear.) then press buttons 2, 3, 5 and 7 in that order within 4 seconds. (The MENU display will change to the Line Mode display.)
4. Select the DEFLECTION CIRCUIT ALIGNMENT (* or C button).
5. Select item 3— PCC (PARABOLA) (2 or 8 button).
6. Adjust the data so that both the vertical lines are straight (4 or 6 button).
7. Select item 5 — PCC (TRAPEZIUM) (2 or 8 button).
8. Adjust the data so that both the vertical lines are straight (4 or 6 button).
9. Write the data into the memory (0 button).
10. Terminate line mode. (1 button).

Note: this adjustment is made with the picture format set to 16:9. Adjustment in any other picture format is not necessary.

2.5.4 Vertical Centring
1. Supply a VIDEO signal (monoscope).
2. Set the picture format to 16:9.
3. Press the MENU button on the remote control (the MENU display will appear.) then press buttons 2, 3, 5 and 7 in that order within 4 seconds. (The MENU display will change to the Line Mode display.)
4. Select the DEFLECTION CIRCUIT ALIGNMENT (* or C button).
5. Select item 6— VERTICAL CENTRE (UPPER) (2 or 8 button).
6. Adjust the data so that the upper marker is 2 (4 or 6 button).
7. Select item 7— VERTICAL CENTRE (LOWER) (2 or 8 button).
8. Adjust the data so that the lower marker is 2 (4 or 6 button).

Adjustments Cont'd

9. Write the data into the memory (0 button).
10. Terminate line mode (1 button).

Note: this adjustment is made with the picture format set to 16:9. Adjustment in any other picture format is not necessary.

2.6 CRT CIRCUIT

2.6.1 Focus

1. Supply a VIDEO signal (monoscope).
2. Press the MENU button on the remote control (the MENU display will appear.) then press buttons 2, 3, 5 and 7 in that order within 4 seconds. (The MENU display will change to the Line Mode display.)
3. Select the FOCUS ALIGNMENT (* or C button).
4. Observe the vertical lines and adjust FOCUS-V control on the Flyback Transformer (T552) for the best focus.
5. Observe the horizontal lines and adjust FOCUS-H control on the Flyback Transformer (T552) for the best focus.
6. Repeat steps 5 and 6 two or more times until no further improvement is seen.
7. Terminate line mode (1 button).

2.7 VIDEO CIRCUIT

2.7.1 Screen Bias, Cut Off, White balance

Allow the set to warm up for twenty minutes or more.

1. Supply a PAL VIDEO signal (white raster).
2. Press the MENU button on the remote control (the MENU display will appear.) then press buttons 2, 3, 5 and 7 in that order within 4 seconds. (The MENU display will change to the Line Mode display.)
3. Make adjustments as shown in table 2.7A:

Service Mode	Item	Data
CUT OFF PRESET	1 - R-Reference	32
	2 - G-Reference	32
	3 - B-Reference	32
VIDEO CIRCUIT ALIGNMENT – 1	1 - Black Level	23
	2 - Contrast	58

Table 2.7A

4. Select the SCREEN BIAS ALIGNMENT (* or C button). The screen will change to display a black picture.
5. Connect an oscilloscope to the cathode of R684 and observe the waveform.
6. Adjust the SCREEN control on the flyback transformer (T552) so that the waveform is as shown in fig 2.7B:

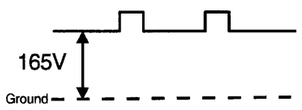

Fig. 2.7B

7. Make adjustments as shown in table 2.7C:

Service Mode	Item	Data
WHITE ALIGNMENT (PAL)	1	R-Gain 45
	2	G-Gain 40 (fixed)
	3	B-Gain 45
WHITE ALIGNMENT (SECAM)	1	R-Gain 45
	2	B-Gain 45

Table 2.7C

8. With a PAL signal supplied, adjust 1 R-GAIN and 3 B-GAIN for PAL to obtain the best white.
9. Supply a SECAM white raster signal.
10. Adjust 1 R-GAIN and 2 B-GAIN for SECAM to obtain the best white.

Note: adjustment 2.6.2 (Black Level) must be performed immediately after this adjustment.

2.7.2 Black Level

Note: this adjustment must follow adjustment 2.6.1 (Screen Bias, Cut Off, White balance).

1. Supply an RF signal (G-card).
2. Set the picture format to 16:9.
3. Select the VIDEO CIRCUIT ALIGNMENT - 1 (* or C button). Colour will be minimised automatically.
4. Select item 1 BLACK LEVEL (2 or 8 button).
5. Adjust the data so that a difference in brightness is just visible between the blue area and the black area (4 or 6 button).
6. Write the data into memory (0 button).

Note: adjustment 2.6.3 (Sub Contrast) must be performed immediately after this adjustment.

2.7.3 Sub Contrast

Note: this adjustment must follow adjustment 2.6.2 (Black Level).

1. Supply an RF signal (Colour-bar, 80% Modulation).
2. Set the picture format to 16:9.
3. Select the VIDEO CIRCUIT ALIGNMENT - 1 (* or C button). Colour will be minimised automatically.
4. Connect a DC milliammeter between pin 1 and 4 of connector LA on PCB-CRT (+ lead to pin 1).
5. Select item 2 CONTRAST (2 or 8 button).
6. Adjust the data so that the DC milliameter indicates 11 00±50uA (4 or 6 button).
7. Write the data into memory (0 button).
8. Terminate line mode (1 button).

2.8 CHROMA CIRCUIT

Note: perform this adjustment after the Cut Off, White balance and Video circuit adjustments.

1. Supply a VIDEO signal (PAL Colour bar).
2. Connect an oscilloscope between TP6B on PCB-CRT and ground.
3. Press the MENU button on the remote control (the MENU display will appear.) then press buttons 2, 3, 5 and 7 in that order within 4 seconds. (The MENU display will change to the Line Mode display.)
4. Select the VIDEO CIRCUIT ALIGNMENT -2 (* or C button).
5. Make adjustments as shown in table 2.8A:

Service Mode	Item	Data
VIDEO CIRCUIT ALIGNMENT - 2	1 – Colour Saturation	31
	2 – Hue	31

Table 2.8A

6. Select item 1 COLOUR SATURATION (2 or 8 button).
7. Adjust the data so that the waveform is as shown in figure 2.7B (4 or 6 button):

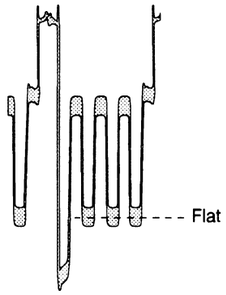

Fig. 2.7B

8. Supply a VIDEO signal (NTSC colour bar).
9. Select item 2 HUE (2 or 8 button).
10. Adjust the data so that the waveform is also as shown in figure 2.7B (4 or 6 button).
11. Write the data into memory (0 button).
12. Terminate line mode (1 button).

2.9 DEFLECTION CIRCUITS — STAGE 2

1. Supply a VIDEO signal (monoscope).
2. Press the MENU button on the remote control (the MENU display will appear.) then press buttons 2, 3, 5 and 7 in that order within 4 seconds. (The MENU display will change to the Line Mode display.)
3. Make adjustments as shown in table 2.9:

Service Mode	Item	Data
HORIZONTAL BACKGROUND POSITION ALIGNMENT	1 - Right Background (4:3)	204
	2 - Left Background (4:3)	88
	3 - Left Background (14:9)	52

Table 2.9

4. Select item 1 RIGHT BACKGROUND (4:3) (2 or 8 button).
5. Adjust the data so that the reading of the right marker is 2 (4 or 6 button).
6. Select item 2 LEFT BACKGROUND (4:3) (2 or 8 button).
7. Adjust the data so that the reading of the left marker is 2 (4 or 6 button).
8. Select item 3 LEFT BACKGROUND (14:9) (2 or 8 button).
9. Adjust the data so that the reading of the left marker is 2 (4 or 6 button).
10. Write the data into the memory (0 button).
11. Terminate line mode (1 button).

2.10 PIP CIRCUIT

1. Supply a VIDEO signal (monoscope).
2. Press the MENU button, select the PIP menu and set the PIP style to 1. Press the DISPLAY button and set the receiver to PIP mode.
3. Display a monoscope signal on the sub-picture.
4. Press the MENU button on the remote control (the MENU display will appear.) then press buttons 2, 3, 5 and 7 in that order within 4 seconds. (The MENU display will change to the Line Mode display.)
5. Make adjustments as shown in table 2.10A:

Service Mode	Item	Data
PIP ALIGNMENT	1 PIP Contrast	2 (Fixed)
	2 PIP Horizontal Position	13
PIP	9 PSH	110

Table 2.10A

6. Select item 2 PIP HORIZONTAL POSITION (2 or 8 button).
7. Adjust the data so that the readings of the left and right markers are the same on the sub-picture (4 or 6 button).
8. Using the * or C button select the IC Adjustment display PIP.
9. Select item 9 PSH (2 or 8 button).
10. Adjust the data so that the sub-picture horizontal positions are adjusted as shown in fig. 2.10B. Press the PIP POSITION button on the remote control to select the PIP position
11. Write the data into memory (0 button).
12. Terminate line mode (1 button).

Service Mode	Item	Data
PIP ALIGNMENT	1 PIP Contrast	2 (Fixed)
	2 PIP Horizontal Position	13
PIP	9 PSH	110

Fig 2.10B

LINE MODE DATA TABLES - SERVICE MODES:

Service Mode: Deflection circuit alignment

Item	Name	Data	Note
1	Horizontal Centre	(38)	2.4.1 (Horizontal centering)
2	Horizontal width	(31)	2.4.2 (Horizontal width)
3	PCC (Parabola)	(31)	2.4.3 (Side PCC)
4	PCC (Corner)	21	
5	PCC (Trapezium)	(4)	2.4.3 (Side PCC)
6	Vertical Centre (Upper)	(31)	2.4.4 (Vertical centering)
7	Vertical Centre (Lower)	(310)	2.4.4 (Vertical centering)
8	Vertical Linearity	21	

Service Mode: Focus Alignment

When activating this mode the conditions necessary for focus alignment are set up.

Service Mode: Screen Bias Alignment

Item	Name	Data	Note
1	R-Reference	32	
2	G-Reference	32	
3	B-Reference	32	

Service Mode: Cut Off Preset

Item	Name	Data	Note
1	R-Reference	32	
2	G-Reference	32	
3	B-Reference	32	

Service Mode: Video Circuit Alignment - 1

Item	Name	Data	Note
1	Black Level	(23)	2.6.2 (Black Level)
2	Contrast	(53)	2.6.3 (Sub Cont)

Service Mode: White Alignment (PAL)

Item	Name	Data	Note
1	R-Gain	(45)	2.6.1 (Screen bias, Cut off, White bal)
2	G-Gain	40	
3	B-Gain	(45)	2.6.1 (Screen bias, Cut off, White bal)

Service Mode: White Alignment (SECAM)

Item	Name	Data	Note
1	R-Gain	(45)	2.6.1 (Screen bias, Cut off, White bal)
2	B-Gain	(45)	2.6.1 (Screen bias, Cut off, White bal)

Service Mode: Video Circuit Alignment - 2

Item	Name	Data	Note
1	Colour Saturation	(31)	2.7 (Colour output)
2	Hue	(31)	2.7 (Colour output)

Service Mode: Horizontal Background position Alignment

Item	Name	Data	Note
1	Right Background (4:3)	(204)	2.7 (Horizontal blanking)
2	Left Background (4:3)	(85)	2.7 (Horizontal blanking)
3	Left Background (14:9)	(52)	2.7 (Horizontal blanking)

Service Mode: Pip Alignment

Item	Name	Data	Note
1	PIP Contrast	2	
2	PIP Horizontal Position	(13)	2.8 (PIP)

IC Adjustment: PIC IC2502

No	Item	Description	Data	Note
1	FYF	Multi-picture background brightness	0	
2	TSL	NR auto, S/N threshold	31	
3	TSU	NR auto, S/N threshold	31	
4	SNC	S/N class, automatic adaption=3	3	
5	FCT	NR HIGH factor	18	

Continues next page.

Adjustments Cont'd

IC Adjustment: FMX IC2557

No	Item	Description	Data	Note
1	ILL	Y interpolation mode, low degree, ABAB w/o i.p.=1	1	
2	ICL	C interpolation mode, low degree, ABAB w/o i.p.=2	2	
3	RDM	Read mode, both input used=0	0	
4	ILM	Schröder algorithm=2	2	
5	ICM	C interpolation mode, medium, ABAB w/o i.p.=2	2	
6	DEC	Edge detector gain factor 3=1	1	
7	ILH	Y interpolation mode, high, ABAB w/o i.p.=1	1	
8	ICH	C interpolation mode, high, ABAB w/o i.p.=2	2	
9	CA0	Hentshel algorithm coefficient a0	244	
10	CA1	Hentshel algorithm coefficient a1	88	
11	CB0	Hentshel algorithm coefficient b1	32	
12	A00	Schröder algorithm coefficient a00	248	
13	A10	Schröder algorithm coefficient a10	112	
14	A01	Schröder algorithm coefficient a01	232	
15	A11	Schröder algorithm coefficient a11	80	
16	B00	Schröder algorithm coefficient b00	3	
17	B10	Schröder algorithm coefficient b10	13	
18	B01	Schröder algorithm coefficient b01	8	
19	B11	Schröder algorithm coefficient b11	40	
20	ML2	Threshold low degree (Small blocks) 128=2	2	
21	ML1	Threshold low degree (Large) 128=2	2	
22	MBL	Threshold in front of blocking module, 24=5	5	
23	MU2	Threshold high degree (Small) 512=1	1	
24	MU1	Threshold high degree (Large) 512=1	1	
25	MM2	Threshold 2nd field difference (Small) 128=1	1	
26	MM1	Threshold 2nd field difference (Large) 128=1	1	
27	HL1	Hysterisis threshold low degree (Large)	10	
28	HL2	Hysterisis threshold low degree (Small)	24	
29	HH1	Hysterisis threshold high degree (Large)	5	
30	HH2	Hysterisis threshold high degree (Small)	3	
31	PXL	864 pixels per line =0	0	
32	WRM	Write mode, normal operation=0	0	
33	NRD	Noise reduction delay, one frame=0	0	
34	RAS	Raster, control by algorithm=0	0	
35	FAL	Fallback mode: LFR1=0 / LFR2=1	(0/1)	
36	FIW	Field indent, window, 7 field periods=0	0	
37	ZMM	Zoom mode, with raster correction=2	2	

IC Adjustment: DPY IC2558

No	Item	Description	Data	Note
1	BPS	Background inserted position	201	
2	BWN	Background width: Normal (4x3)	88	
3	BW1	Background width: 14x9	52	
4	BP6	Background inserted position 60Hz shift data	-2	
5	THR	DCTI sensitivity threshold	1	
6	TRA	DCTI improved transition	10	
7	LCO	Luminance peaking LPF gain	4	
8	BCO	Luminance peaking BPF gain	8	
9	COR	Luminance peaking BPF coring	0	
10	PHA	Compensation of non linear phases	0	
11	HCO	Luminance peaking HPF gain	5	
12	HSD	Start of black level insertion	3	
13	BLK	Inserted black level	73	

IC Adjustment: CSG IC2503

No	Item	Description	Data	Note
1	BLS	BLN start time for 50/60Hz	49	
2	BP5	BLN stop time for 50Hz (Multi-picture H-phase)	105	
3	BP6	BLN stop time for 60Hz (Multi-picture H-phase)	93	
4	2S5	H2 start time for 50Hz	210	
5	2S6	H2 start time for 60 Hz	212	
6	2P5	H2 stop time for 50 Hz	160	
7	2P6	H2 stop time for 60Hz	182	
8	VCO	Centre of frequency, 27.0MHZ=0	0	
9	ICL	Clock frequency	182	
10	ICM	Clock frequency	81	
11	FIN5	Start of clock frequency in number of line for 50Hz	8	
12	FIN6	Start of clock frequency in number of line for 60Hz	8	
13	FIL	Freezing in number of lines, No freezing=0	5	
14	VTH	Vertical pulse threshold, 26.6(s=0	0	
15	CLO	CVBS clamping ON=0	0	

IC Adjustment: DPY (Continued) IC2558

No	Item	Description	Data	Note
14	PBY	PAL-BG/DK Y Delay	6	
15	PLY	PAL-L,I Y Delay	10	
16	PAY	PAL-AV Y Delay	9	
17	PSY	PAL-S Y Delay	8	
18	SBY	SECAM-BG DK Y Delay	8	
19	SLY	SECAM-L,I Y Delay	10	
20	SAY	SECAM-AV Y Delay	11	
21	SSY	SECAM-S Y Delay	11	
22	NAY	NTSC-AV Y Delay	8	
23	NSY	NTSC-S Y Delay	8	
24	422	Interpolation filtering 4:2:2, OFF=0	0	
25	444	Interpolation filtering 4:4:4, ON=1	1	
26	OVF	Oversampling interpolation filter ON=1	1	
27	OVS	Oversampling doubling ON=1	1	
28	CBY	4:3 blanking area, luminance	0	
29	CBU	4:3 blanking area, colour	0	
30	CBV	4:3 blanking area, colour	0	
31	APY	Amplitude of luminance, normal=1	1	
32	APU	Amplitude of (B-Y), normal=1	1	
33	APV	Amplitude of (R-Y), normal=1	1	
34	YD2	Delay fine adjustment	1	
35	PRN	PLL frequency range	3	
36	PON	Internal PLL ON=1	1	

IC Adjustment: MSC IC2559

No	Item	Description	Data	Note
1	H16	HS2 Phase for 19x9 mode	20	
2	H43	HS2 Phase for 4x3 mode	31	
3	H4W	HS2 Phase for 4x3 & 16x9 mode	36	
4	H4R	HS2 Phase for 4x3 POP-R side	21	
5	H4L	HS2 Phase for 4x3 POP-L side	41	
6	HWR	HS2 Phase for 4x3 wide & 14x9 POP-R side	30	
7	HWL	HS2 Phase for 4x3 wide & 14x9 POP-L side	42	
8	VNR	VS Noise reduction, window=0	0	
9	FLF	Field switching in field mode	0	
10	FLF	Free-run field mode=0	0	
11	WDL	Write operation delay	18	

IC Adjustment: RGB IC201

No	Item	Description	Data	Note
1	RRL	Red reference	32	
2	GRL	Green reference	32	
3	BRL	Blue reference	32	
4	BRI	Brightness	23	
5	SAT	Colour	36	
6	CON	Contrast	53	
7	RGN	Red gain for PAL/NTSC	45	
8	GGN	Green gain	40	
9	BGN	Blue gain for PAL/NTSC	45	
10	RGS	Red gain for SECAM	45	
11	BGS	Blue gain for SECAM	45	
12	PDL	Peak Drive Limit	63	
13	GMA	Gamma	31	
14	BRL	Brightness lower limit	0	
15	BRU	Brightness upper limit	52	
16	CRL	Colour lower limit	0	
17	CRU	Colour upper limit	63	
18	CNL	Contrast lower limit	10	
19	CNU	Contrast upper limit	63	
20	DEL	No delay of leading edge of clamping pulse switched off=1	1	
21	HDT	272(PAL), 224(NTSC) lines=0	0	
22	FSB	Full screen black level: Normal=0/Gray screen=1	0	
23	BCO	Normal;=0/RGB out clamped to DC=1	0	
24	ADB	Adaptive black OFF=0	0	
25	YH1	Y High level, 1.0Vp-p (black-white)=1	1	
26	MD2	Brightness control enabled=0	0	
27	BLS	Blue stretch ON=1 (white adj.=0)	1	
28	REL	Peak drive limit to absolute output=0	0	
29	TCP	Time constant for 2fH=0	0	

IC Adjustment: DEL IC501

No	Item	Description	Data	Note
1	HPH*	H Phase	(38)	
2	EWW*	E/W Width/Width ratio	(31)	
3	EWP*	E/W Parabola/Width ratio	(31)	
4	EWC	E/W Corner/Parabola ratio	21	
5	EWT*	E/W Trap	(4)	
6	VAP*	Vertical Amplitude	(31)	
7	VSP*	Vertical Slope	(310)	
8	VSC	V S-Correction	21	
9	VSS	V Start Scan	5	
10	VOC	V OFF-Centre	2	
11	EHT	EHT Compensation	31	
12	H45	4:3 HPH for 50Hz shift data	-4	
13	HW5	4:3 WIDE HPH for 50Hz shift data	-4	
14	V14	VSP ratio for 14x9	86	
15	VP1	VSP ratio for panoramic 1	93	
16	PP1	PANORAMA 1 VAP shift data	-5	
17	WWP	PANORAMA 1 EWW shift data	12	
18	WPP	PANORAMA 1 EWP shift data	-2	
19	VP2	VSP ratio for panoramic 2	95	
20	PP2	PANORAMA 2 V-AMP shift data	-7	
21	VCN	VSP ratio for CINEMA	76	
22	VA6	VAP for 60Hz shift data	-2	
23	HP6	HPH for 60Hz shift data	-4	
24	VP6	VSP for 60Hz shift data	-58	
25	H46	4:3 HPH for 60Hz shift data	-6	
26	HW6	4:3 WIDE HPH for 60Hz shift data	-3	
27	HRG	RGB HPH for 50Hz shift data	-4	
28	SCP	PANORAMA 2 VSC MAX data	63	
29	P2P	PANORAMA 2 EWP	+2	
30	P2C	PANORAMA 2 EWC	+17	
31	CLS	Clamp shift	4	
32	MS	Adaptive mode=0/ Constant slope mode=1	1	
33	WS	No wait state=0	0	
34	DIN	De-interlace OFF=1	1	
35	GBS	Guard and 48/12 lines=1	1	
36	VWT	Vertical wait	0	
37	VPR	Vertical power reduction, 20% reduction=1	0	
38	CPR	Compression OFF=0	0	
39	DIP	De-interlace phase, 42 clock=1	0	
40	CSU	Clamp suppression mode, ON=1	0	

***Note:** Items marked * can be changed with either Service mode or the IC Adjustment.

IC Adjustment: MSD IC2002

No	Item	Description	Data	Note
1	HUE	TINT control for NTSC (MAIN)	31	
2	TNL	Tint lower limit	0	
3	TNU	Tint upper limit	63	

IC Adjustment: MSD2 IC7202

No	Item	Description	Data	Note
1	HUE	PIP TINT control for NTSC shift data	0	

Continues next page.

MITSUBISHI CT-32CW1BD

Adjustments Cont'd

IC Adjustment:	PIP	IC7206		
No	**Item**	**Description**	**Data**	**Note**
1	CON	Contrast	2	
2	HSI	Inserted signal H delay	13	
3	WON	Wipe function ON=1	1	
4	WSP	Wipe speed	0	
5	CHY	Character luminance	1	
6	CBY	Character background luminance	2	
7	SEL	Delay of SEL out	0	
8	VER	DAC out clamping only during line blanking=0	0	
9	PSH	PIP H POSITION Adjustment	(110)	2.8 (PIP)
10	PSV	PIP V POSITION	154	
11	PLN	Line standard according to Main channel=0	0	
12	PMD	Main channel line standard auto detect=0	0	
13	IMD	Sub channel line standard auto detect=0	0	
14	AMS	Chroma amplitude, normal=0	0	
15	VSI	Inserted signal V delay	15	
16	VSP	Parent signal V delay	15	
17	FRY	Frame luminance	0	
18	FRV	Frame B-Y	0	
19	FRU	Frame R-Y	0	
20	INF	Frame OFF=0	0	
21	FWV	Vertical frame width	0	
22	FWH	Horizontal frame width	0	
23	PTC	PLL filter time constant	0	
24	PDV	R-Y pedestal value	7	
25	PDU	B-Y pedestal value	7	
26	BLK	Line blanking delay	6	

DBF Diagram

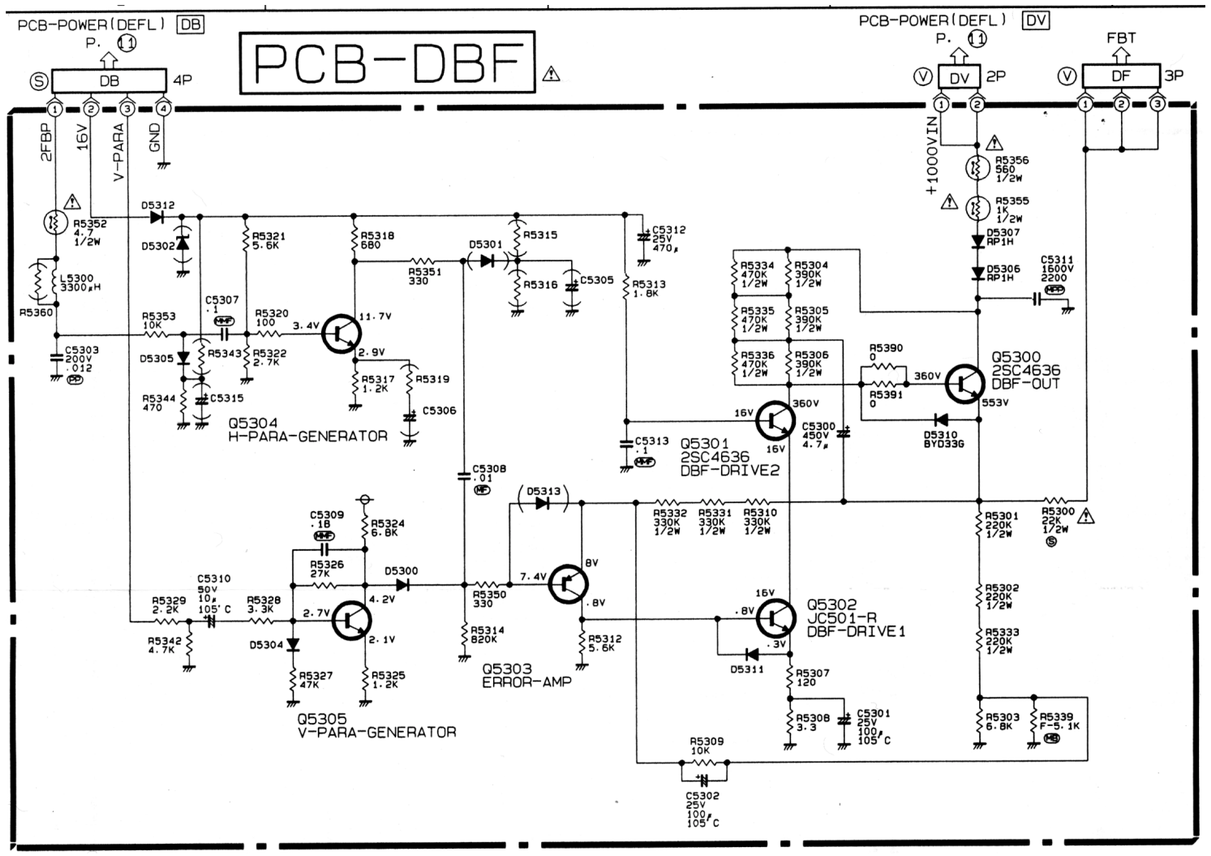

Remote Control Diagram

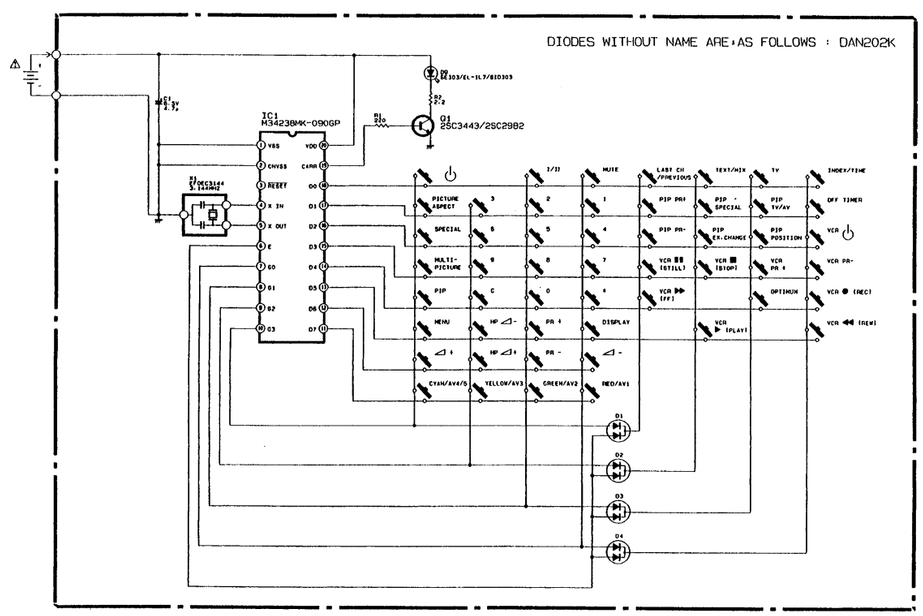

IC450 Diagram

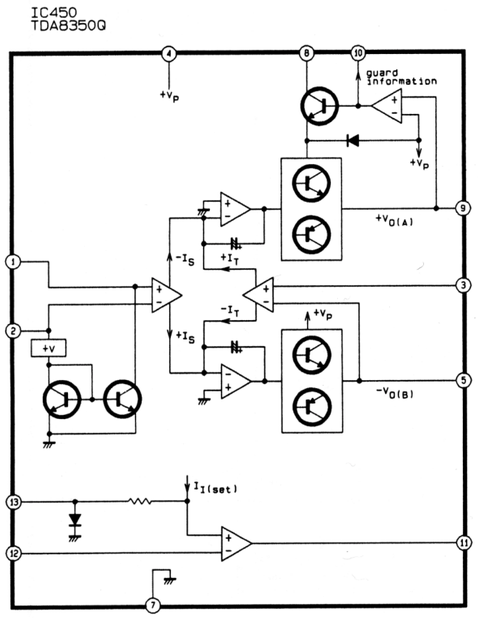

DIODE WITHOUT NAME IS 1N4148.
TRANSISTOR WITHOUT NAME IS AS FELLOWES.

PNP JA101-Q.R
NPN JC501-Q.R

RASISTOR WITHOUT RATED POWER IS 1/4. 1/6W.

Power Deflection Diagram

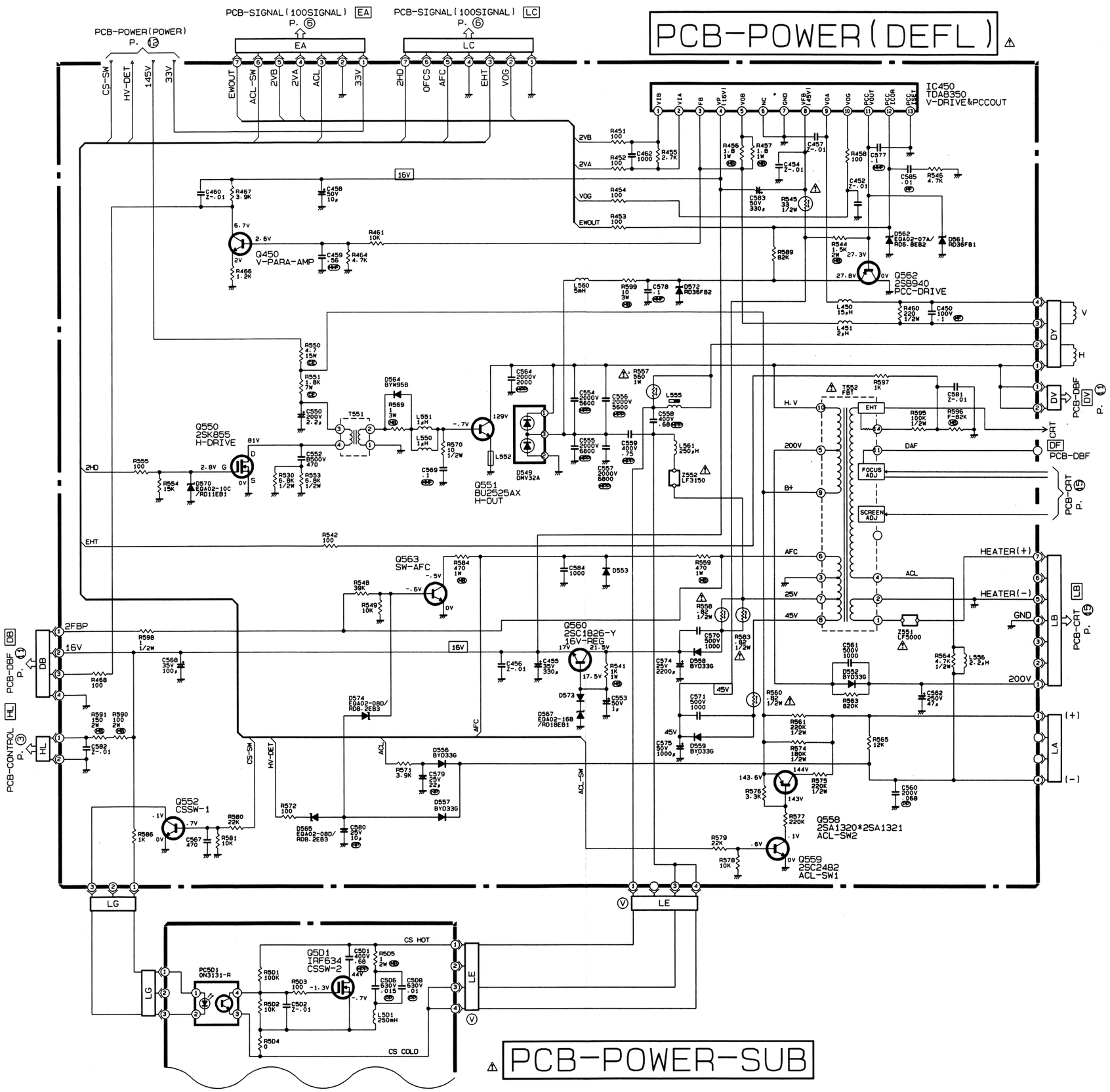

Power Supply Diagram

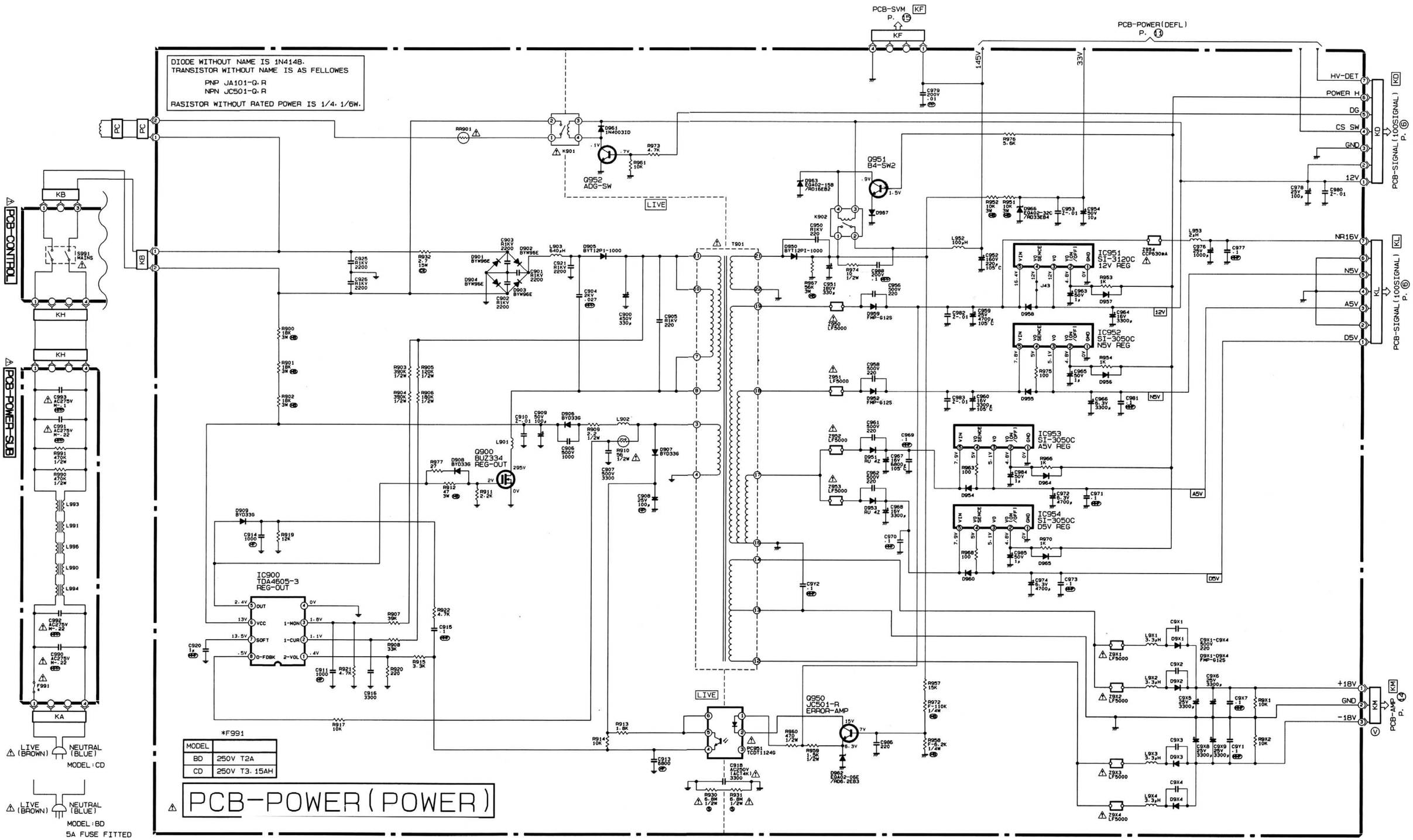

100Hz Signal Diagram

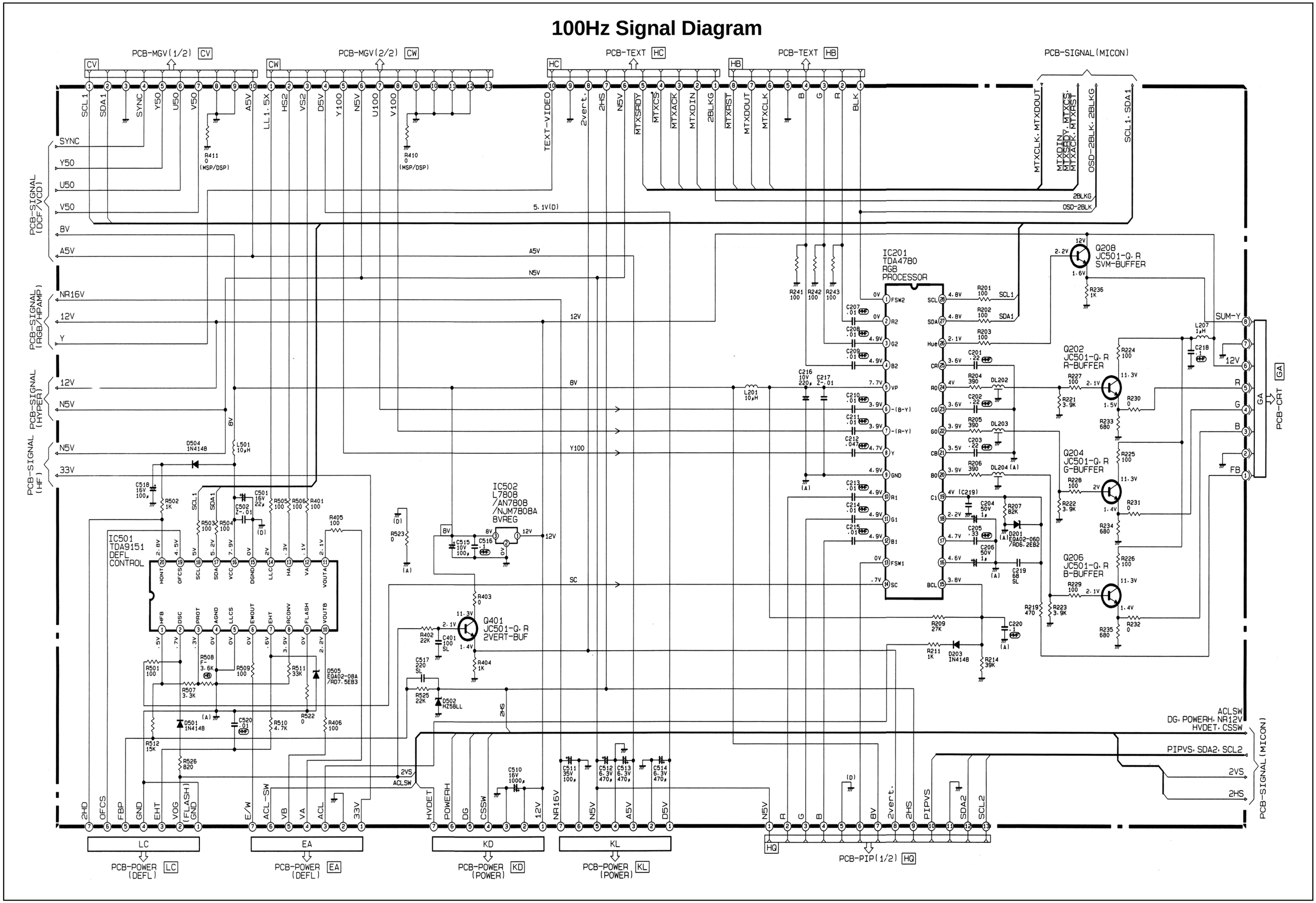

Audio Amp Diagram

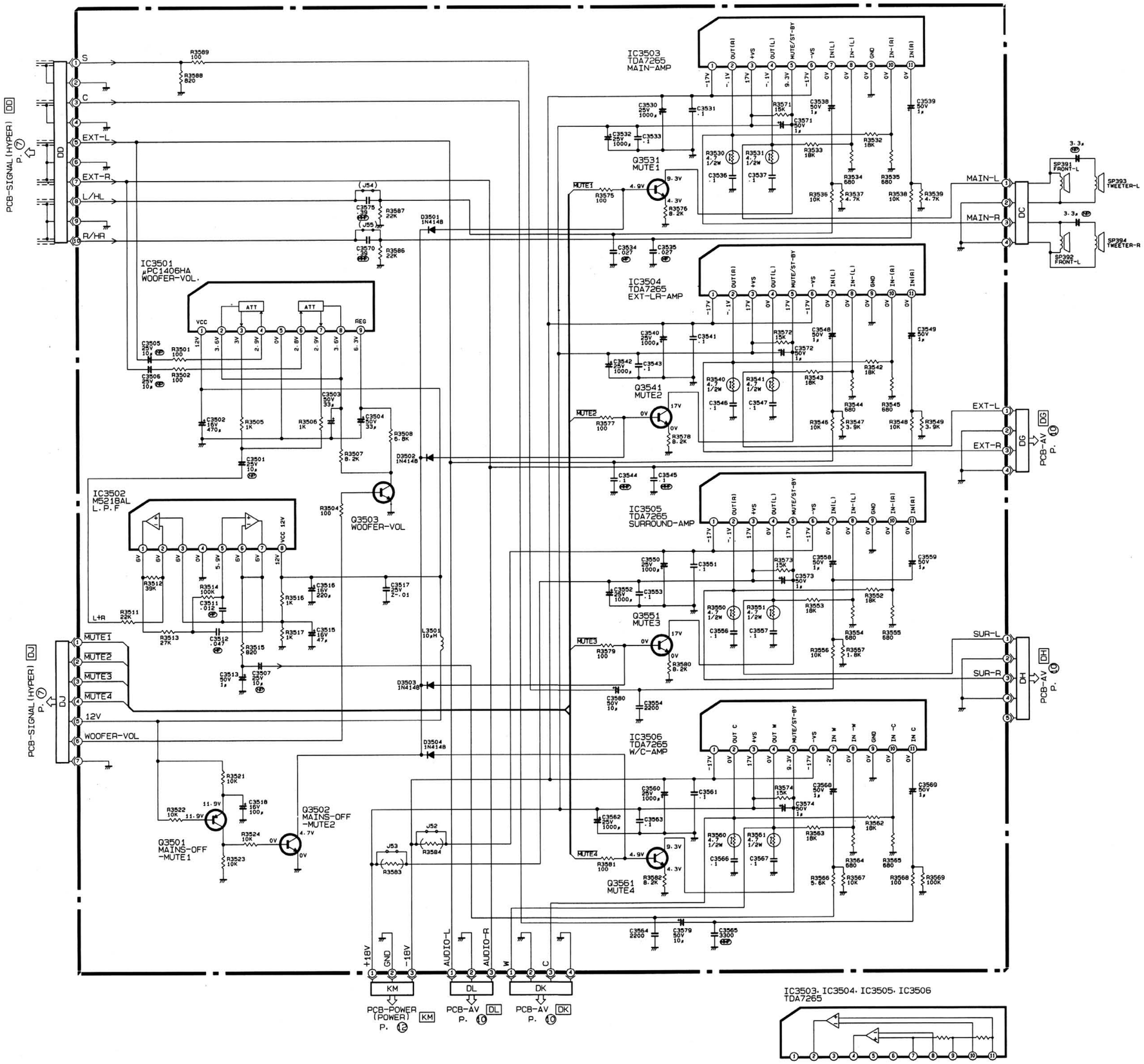

Audio Processing Diagram

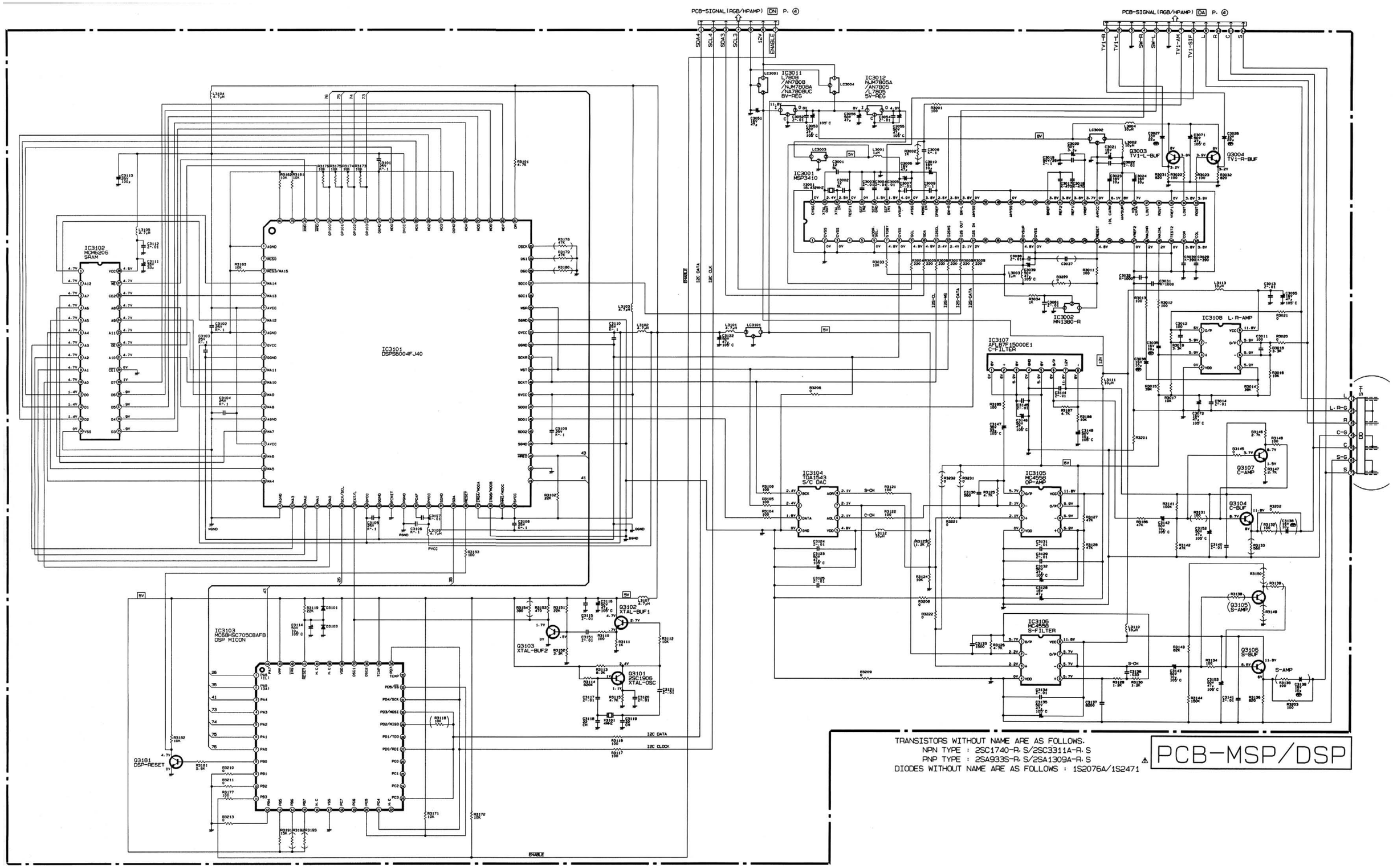

AV Diagram

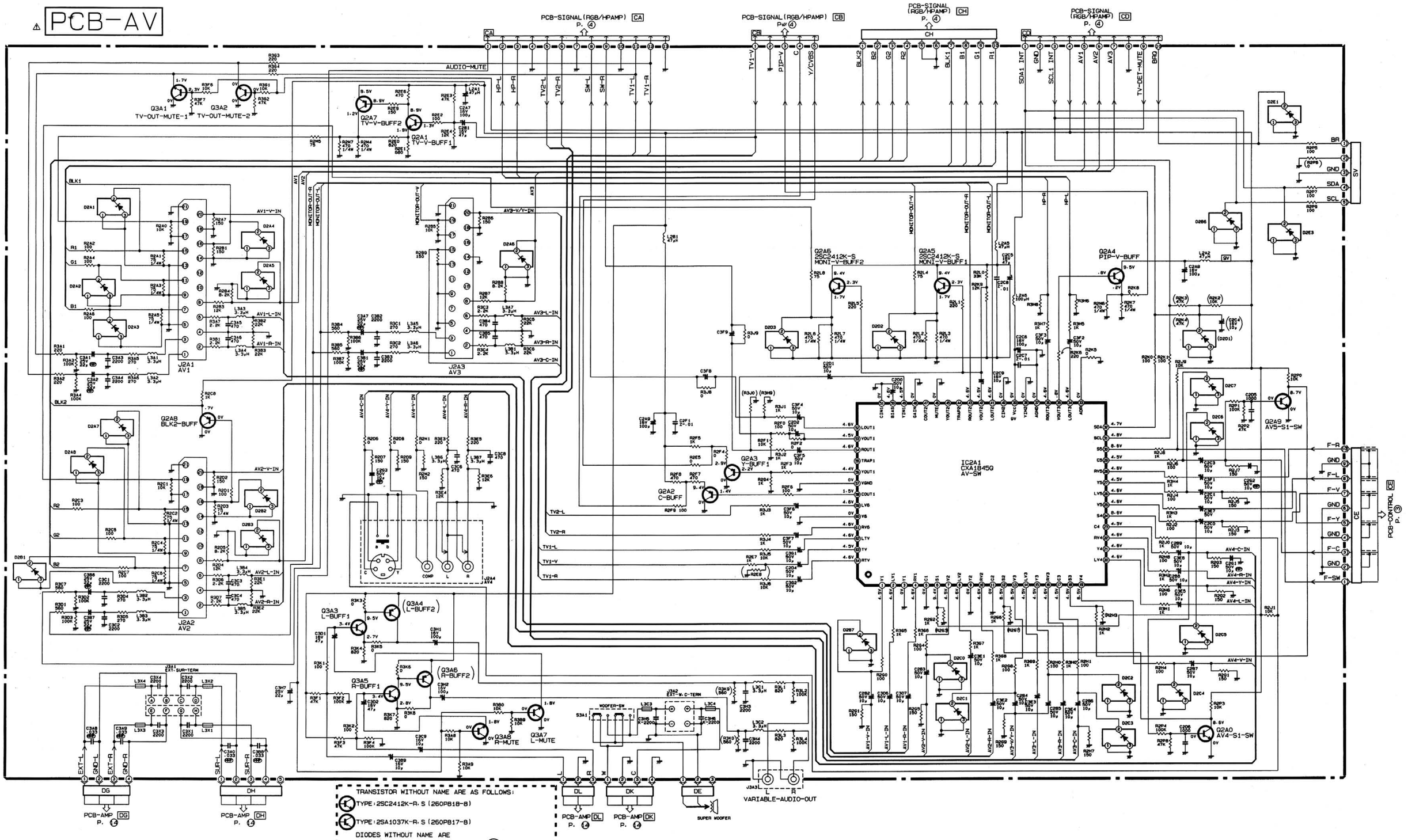
PCB-AV
PCB-SIGNAL (RGB/HPAMP) CA
PCB-SIGNAL (RGB/HPAMP) CB
PCB-SIGNAL (RGB/HPAMP) CH
PCB-SIGNAL (RGB/HPAMP) CD
AUDIO-MUTE
Q3A1 TV-OUT-MUTE-1
Q3A2 TV-OUT-MUTE-2
Q2A7 TV-V-BUFF2
Q2A1 TV-V-BUFF1
Q2A5 2SC2412K-S MONI-V-BUFF2
Q2A5 2SC2412K-S MONI-V-BUFF1
Q2A4 PIP-V-BUFF
Q2A8 BLK2-BUFF
Q2A3 Y-BUFF1
Q2A2 C-BUFF
IC2A1 CXA1845Q AV-SW
Q2A9 AV5-S1-SW
Q2A0 AV4-S1-SW
Q3A3 L-BUFF1
Q3A4 (L-BUFF2)
Q3A5 R-BUFF1
Q3A6 (R-BUFF2)
Q3A8 R-MUTE
Q3A7 L-MUTE
J2A1 AV1
J2A2 AV2
J2A3 AV3
J2A4 AV4
J3A1 EXT-SUR-TERM
J3A2 EXT-W.C-TERM
J3A3 VARIABLE-AUDIO-OUT
WOOFER-SW
SUPER WOOFER
PCB-AMP DG
PCB-AMP DH
PCB-AMP DL
PCB-AMP DK
PCB-CONTROL CE
TRANSISTOR WITHOUT NAME ARE AS FOLLOWS:
TYPE:2SC2412K-R.S (260P818-8)
TYPE:2SA1037K-R.S (260P817-8)
DIODES WITHOUT NAME ARE
HSM2836 (264P821-1)
ZENER DIODE WITHOUT NAME ARE RD9.1MB2 (264P816-7)
RESISTERS WITHOUT RATED POWER IN PCB-AV(E) ARE 1/10W.

MITSUBISHI CT-32CW1BD

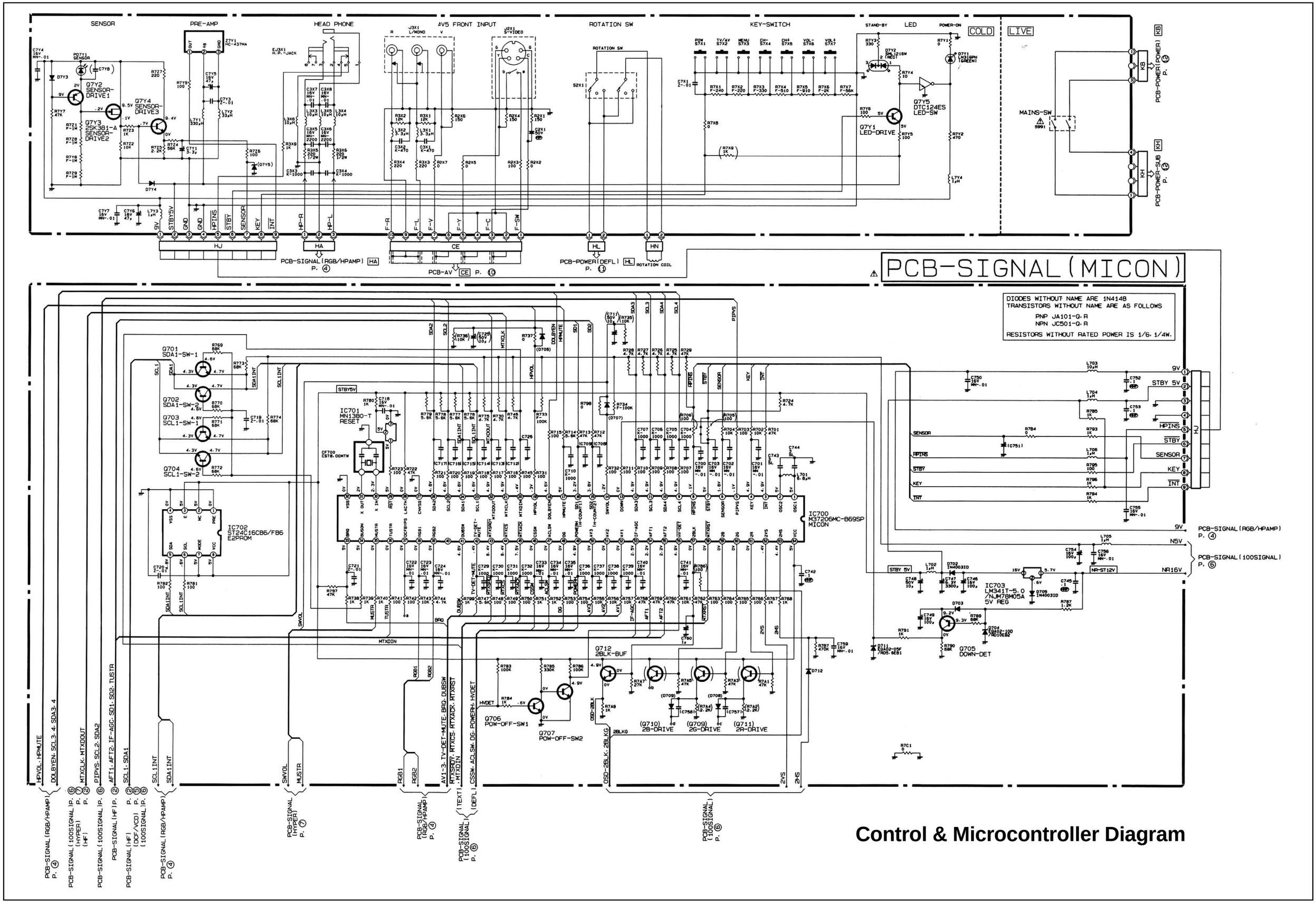

Control & Microcontroller Diagram

CRT & SVM Diagram

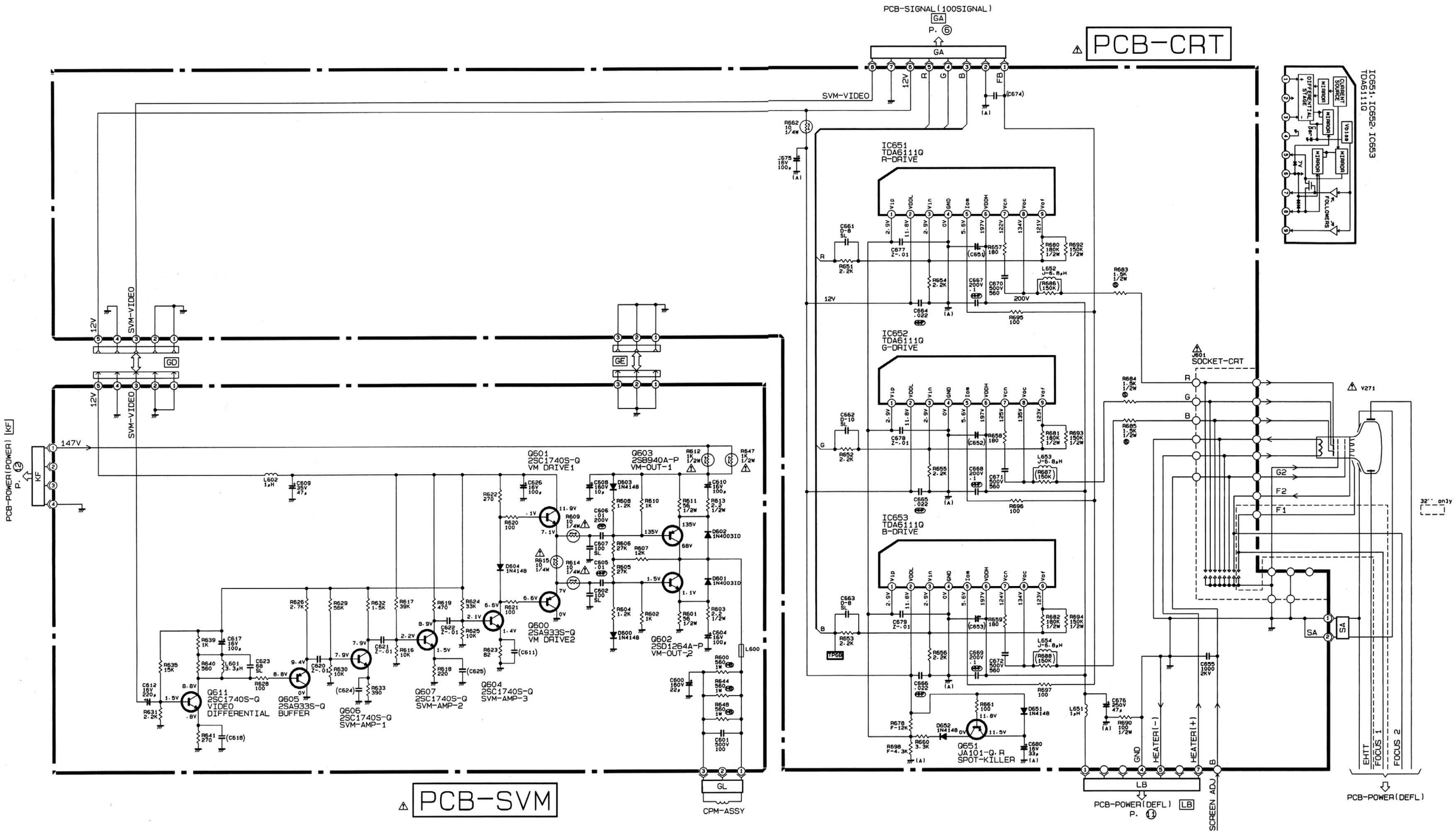

MITSUBISHI CT-32CW1BD

Signal DCF/VCD Diagram

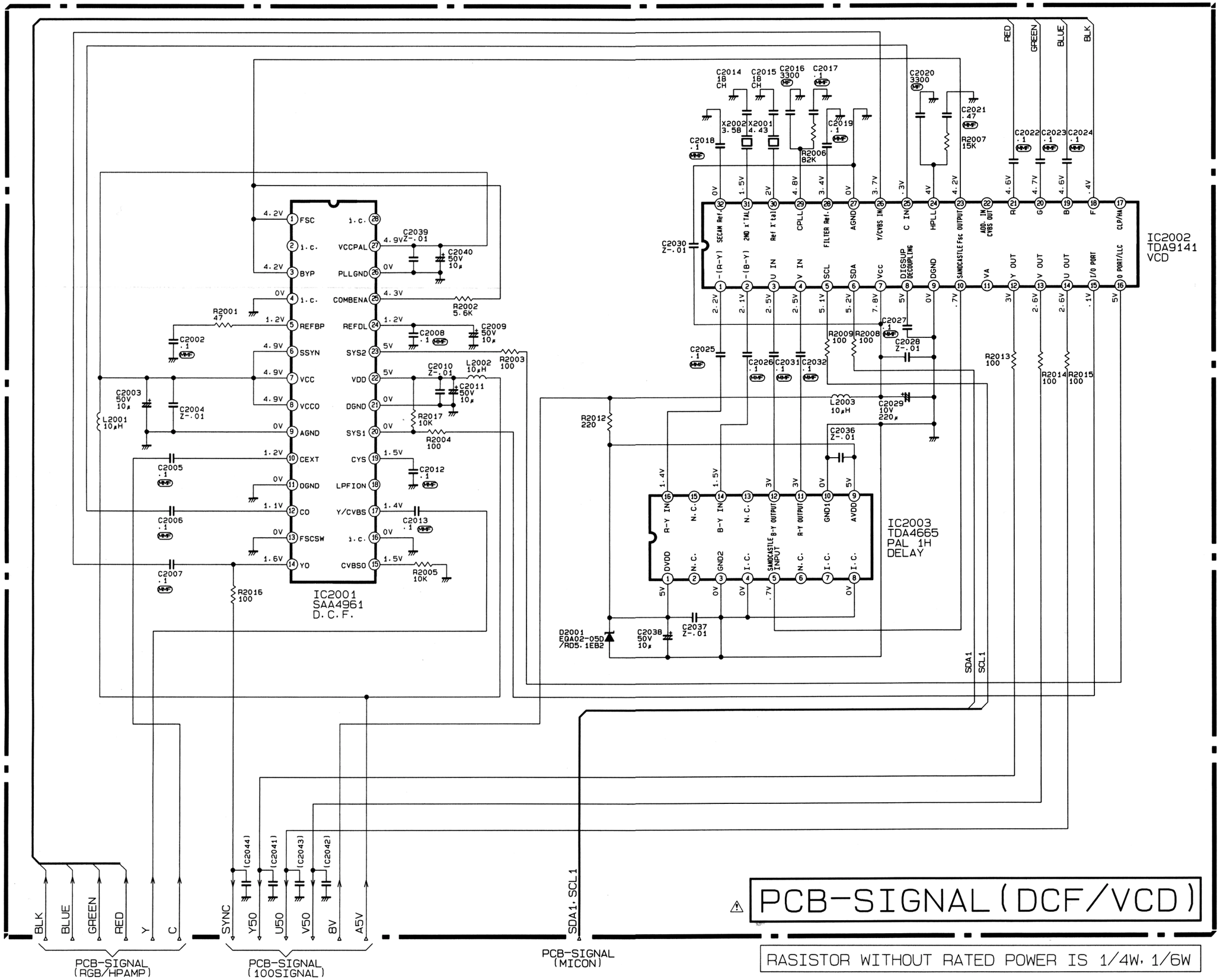

Hyper Signal Diagram

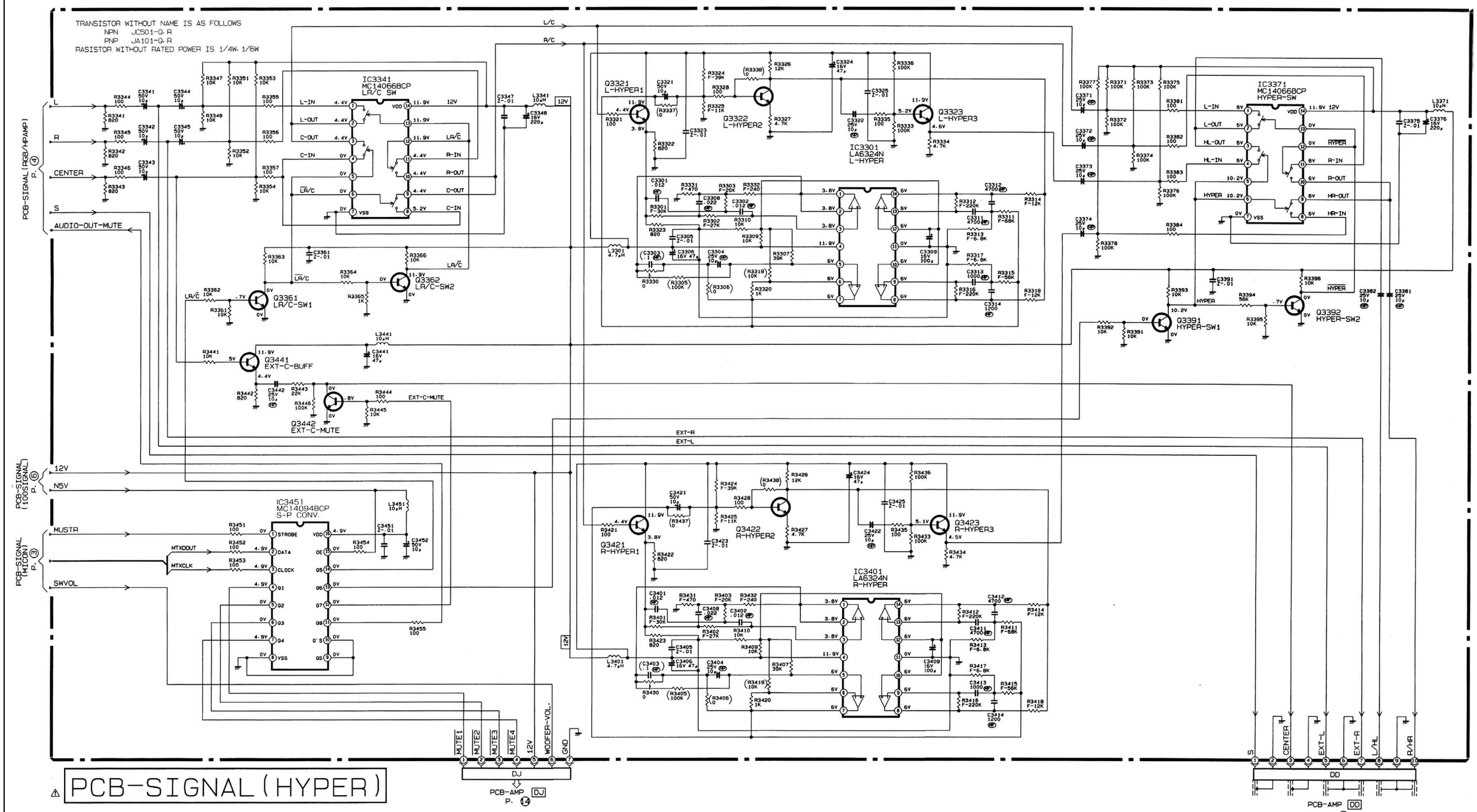

MGV Diagram 1 of 2

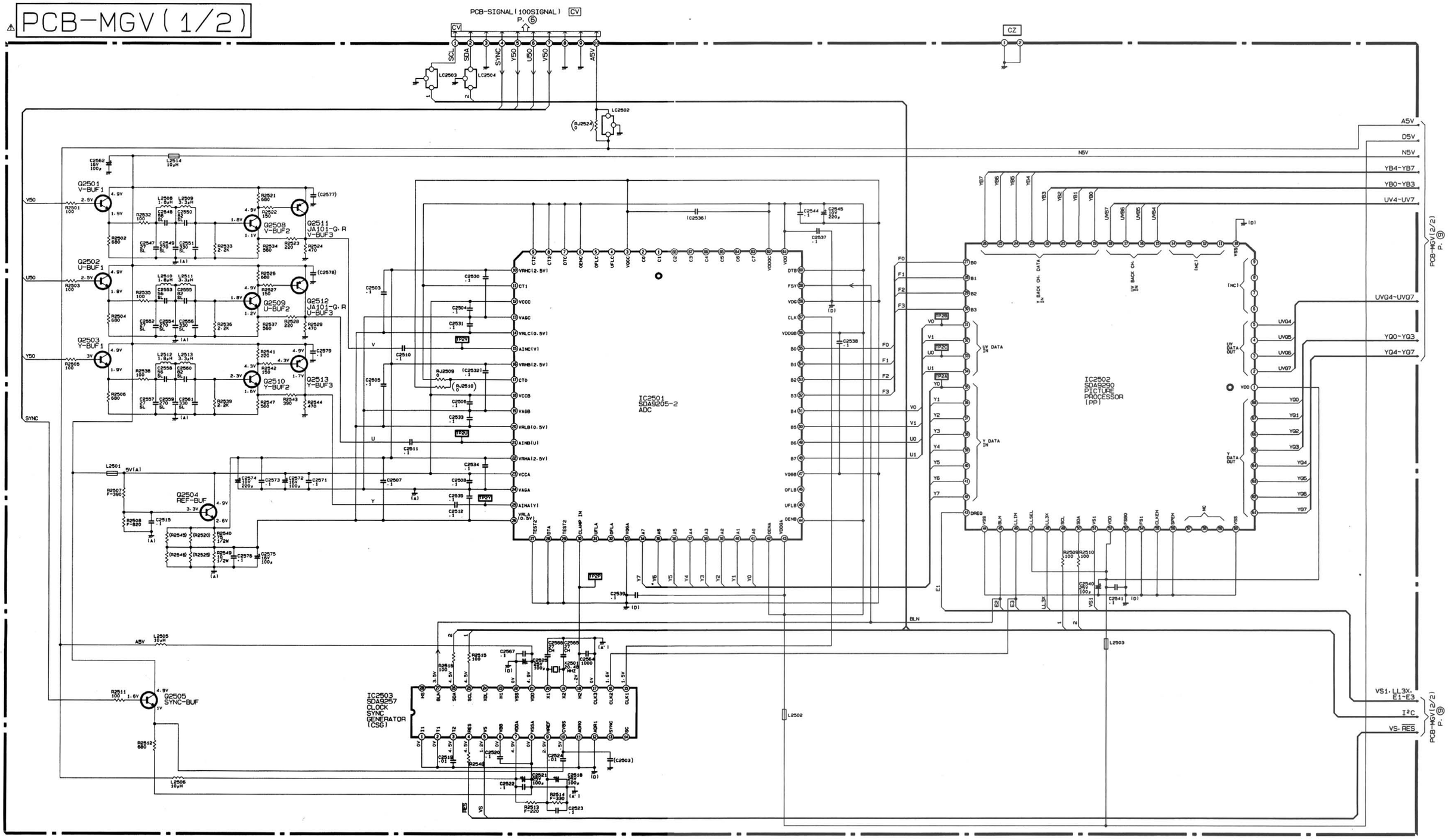

TRANSISTORS WITHOUT NAME ARE AS FOLLOWS.
NPN TYPE : JC501-Q.R
PNP TYPE : JA101-Q.R
RESISTORS WITHOUT RATED POWER ARE 1/10W

MITSUBISHI CT-32CW1BD

MGV Diagram 2 of 2

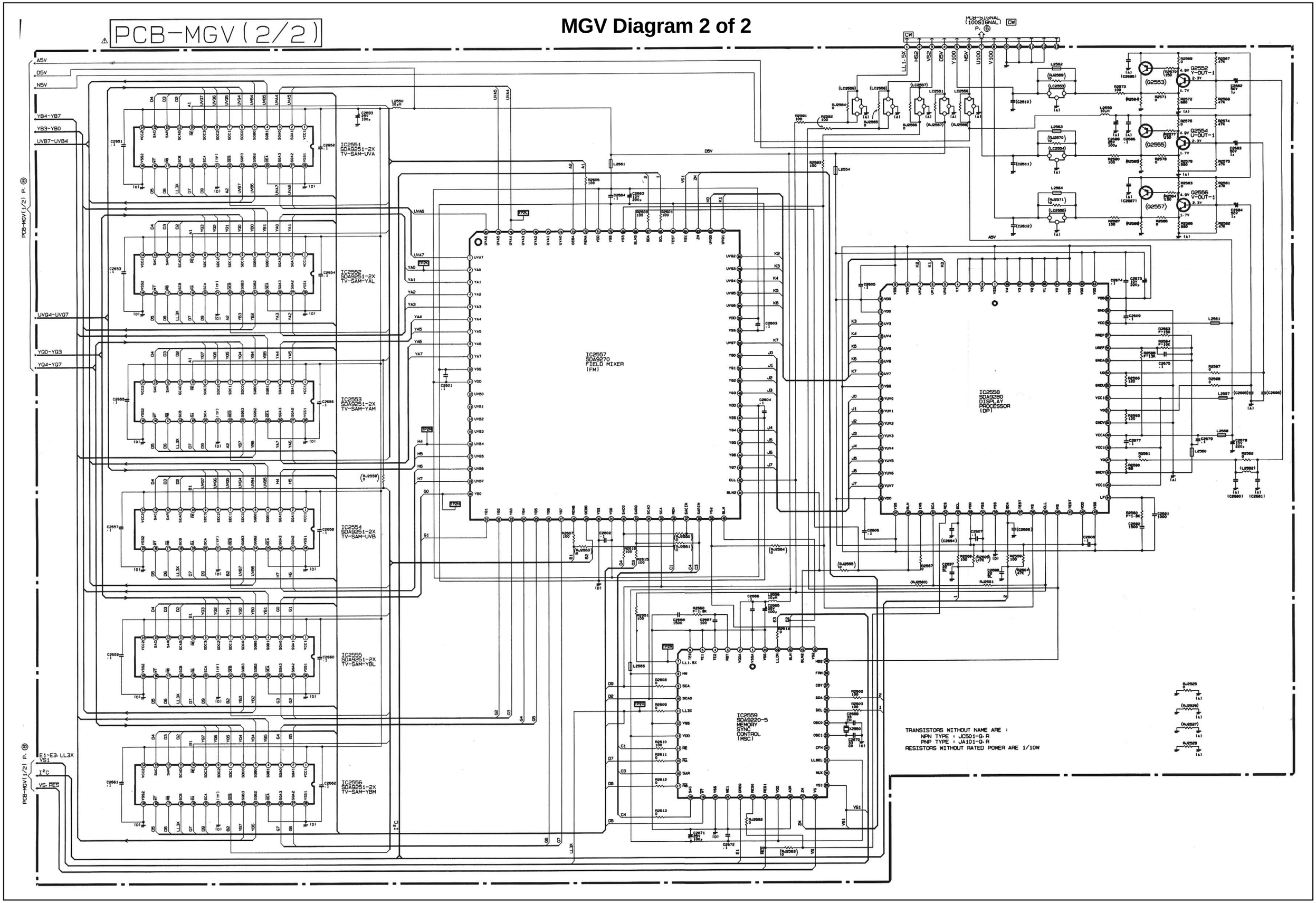

PIP Diagram 1 of 2

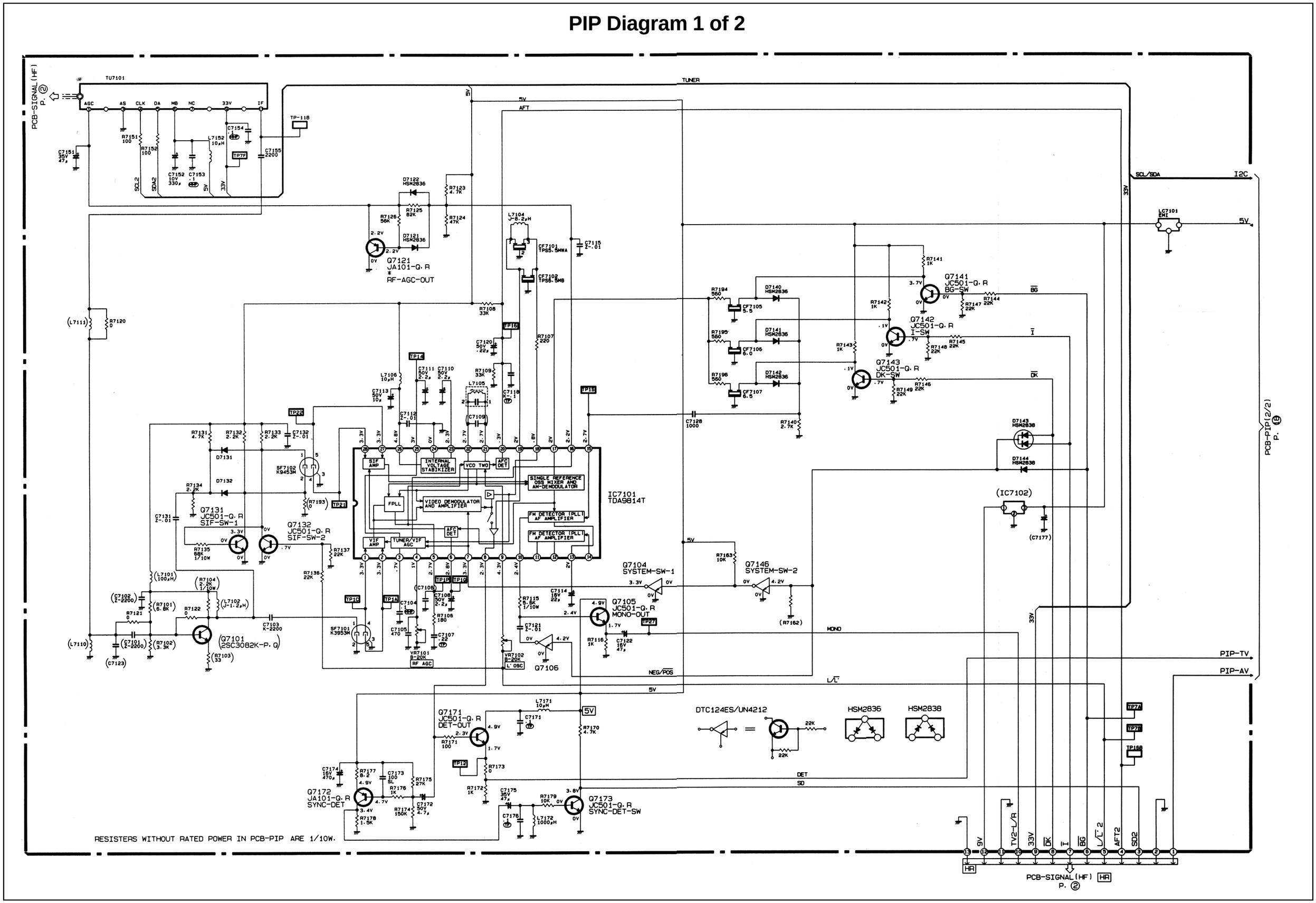

PIP Diagram 2 of 2

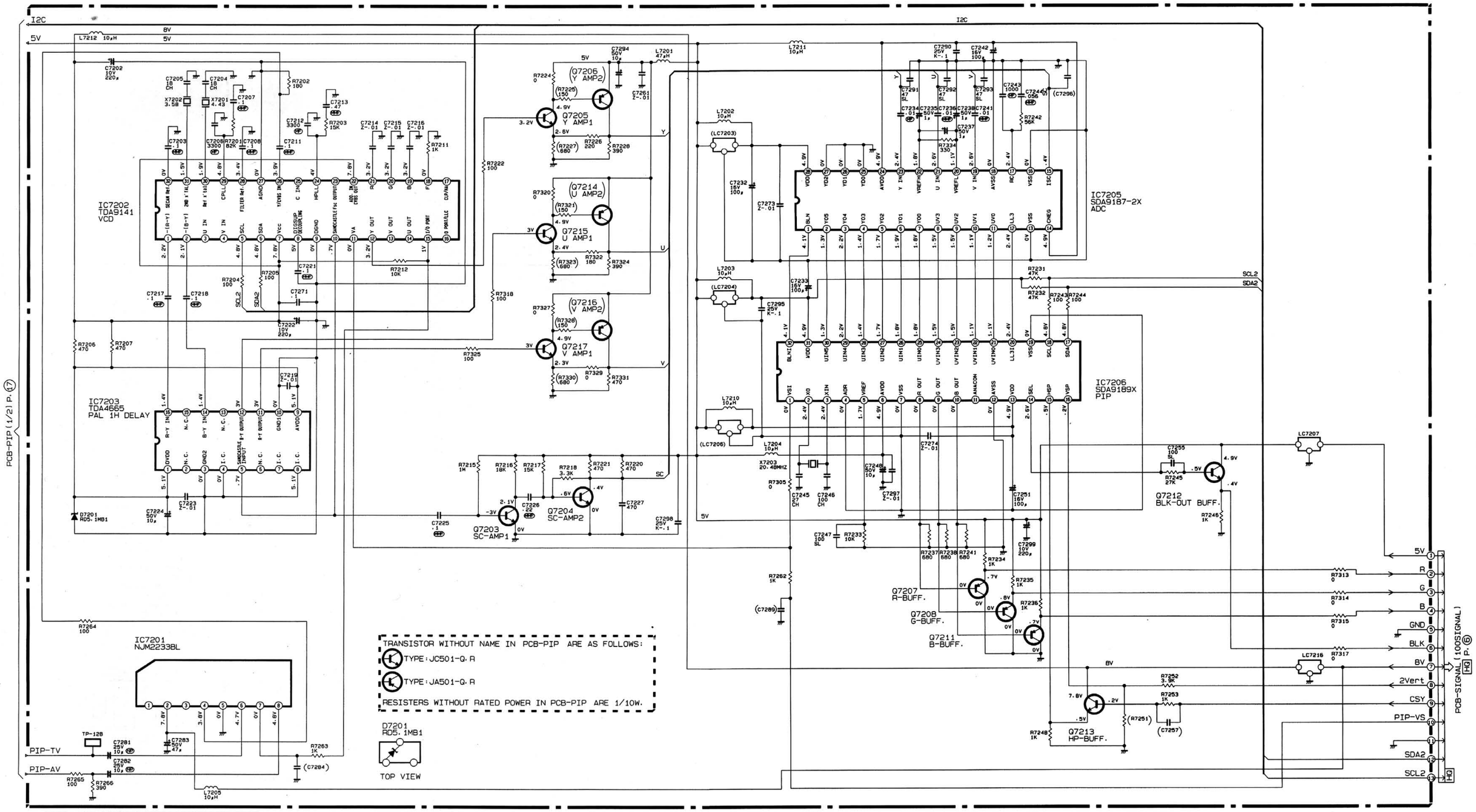

PCB-PIP (2/2)

RGB Switching/Headphone Amp Diagram

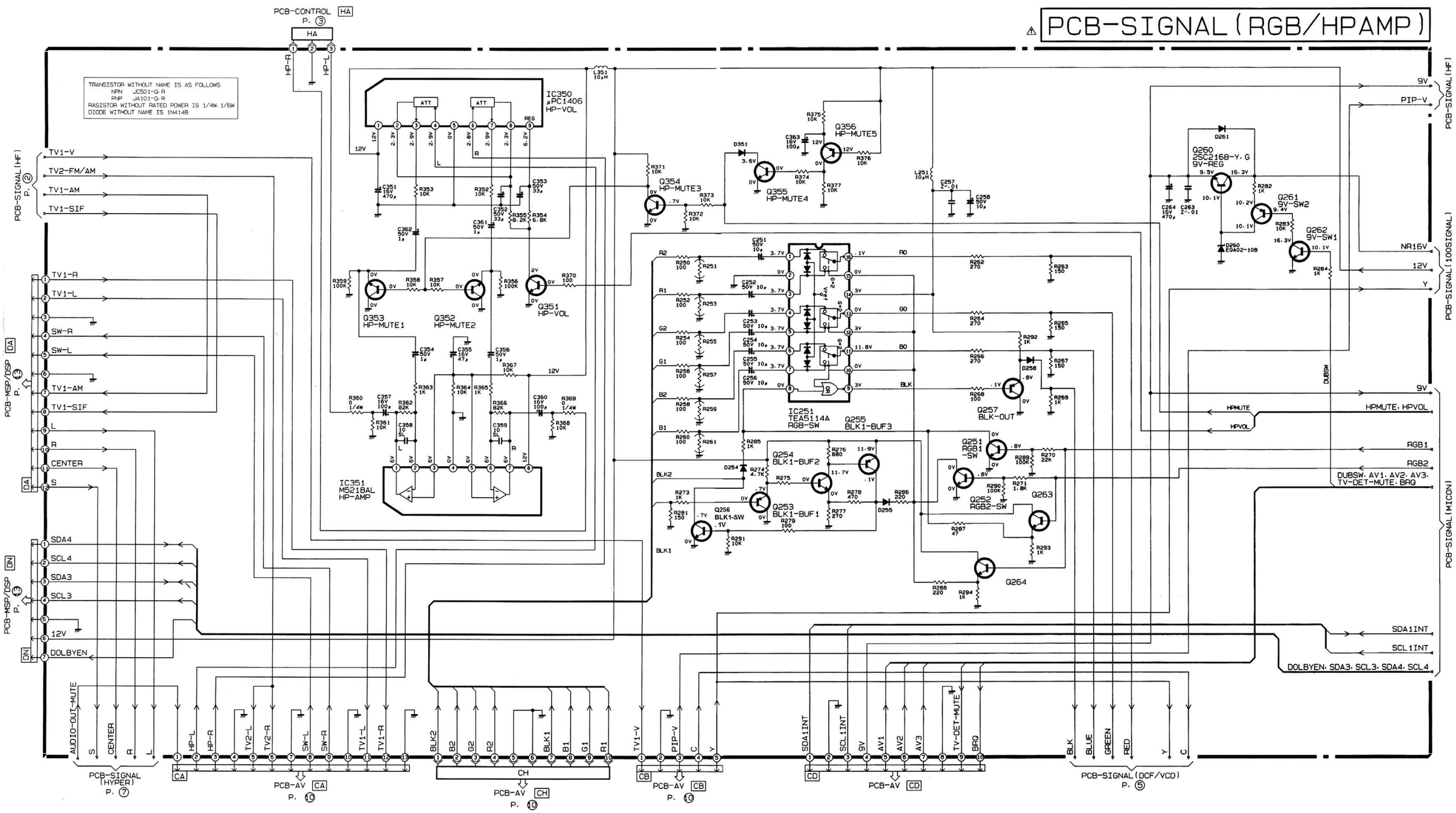

Text Diagram

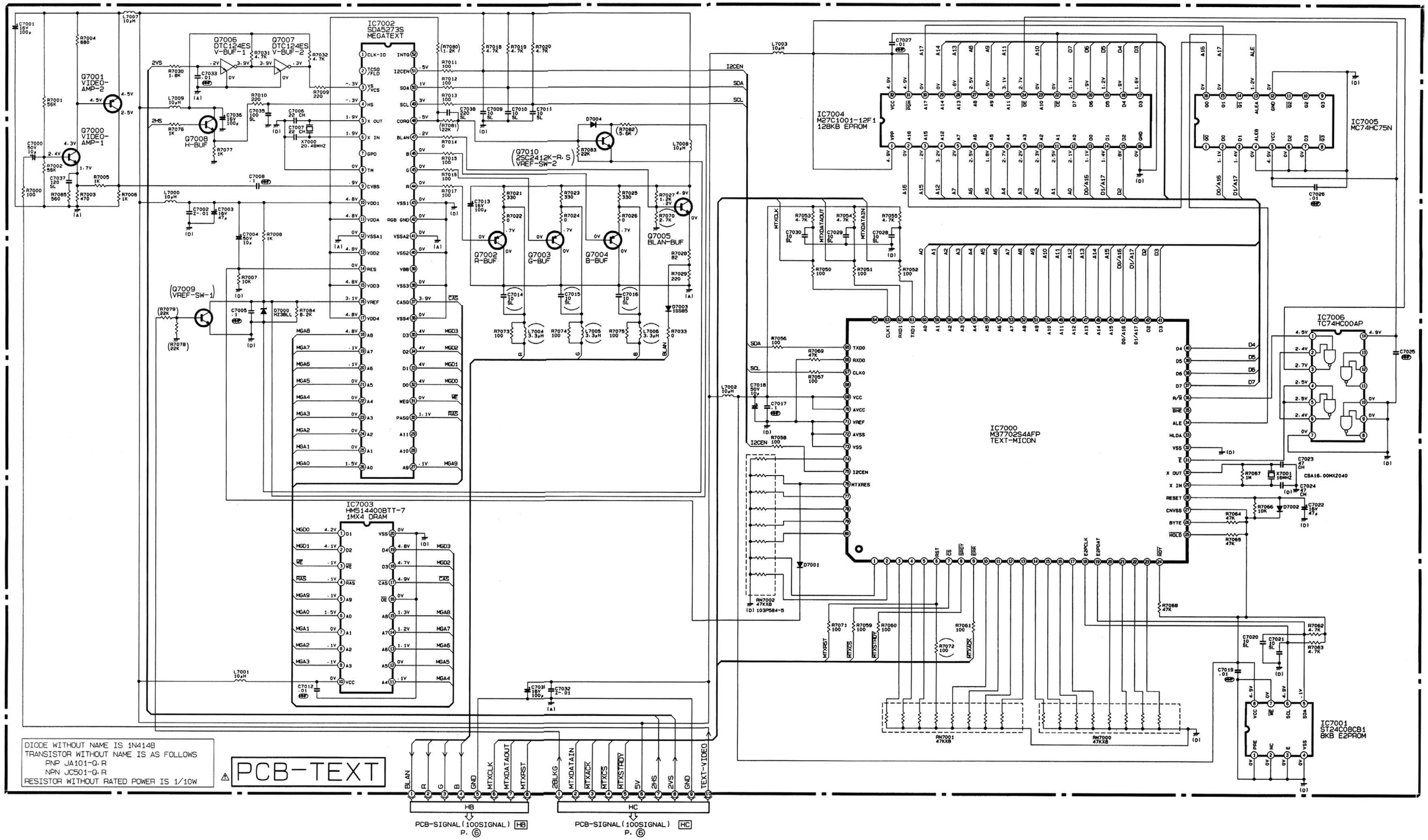

MITSUBISHI CT-32CW1BD

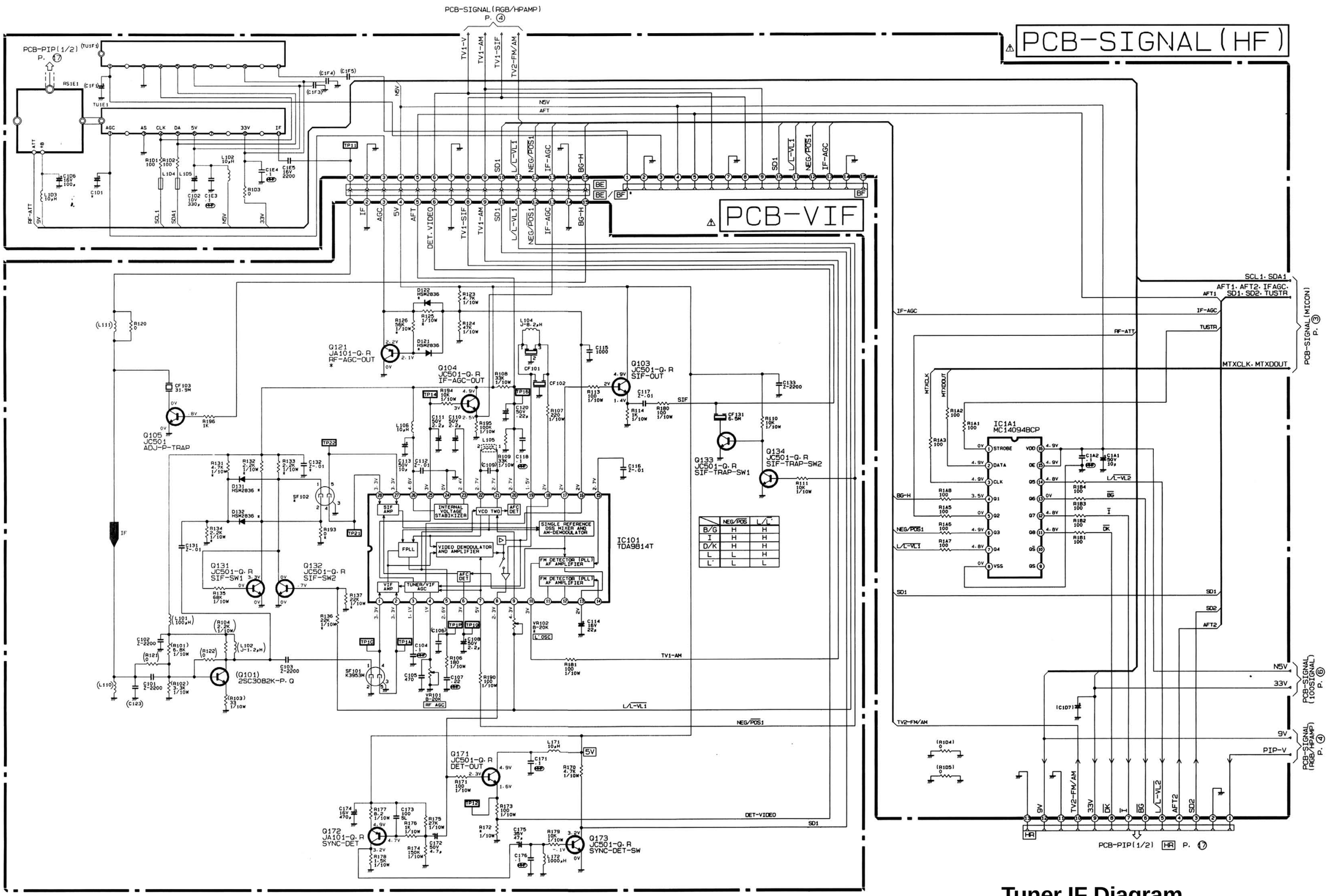

B/G	NEG/POS	L/L'
I	H	H
D/K	H	H
L	L	H
L'	L	L

	TU1E1	TU1F1	C1E3	C1F3	C1E4	C1F4	C1E5	C1F5	BE	BF	RS1E1	C1D6	L1D3
CT-32CW1	○	×	○	×	○	×	○	×	○	×	○	○	○
~~CT-28CW1~~	○	×	○	×	○	×	○	×	○	×	○	○	○
~~CT-29CV1~~	×	○	×	○	×	○	×	○	×	○	×	×	×

TU1E1:PHONO/PIP

TU1F1:IEC/NO PIP

Tuner IF Diagram
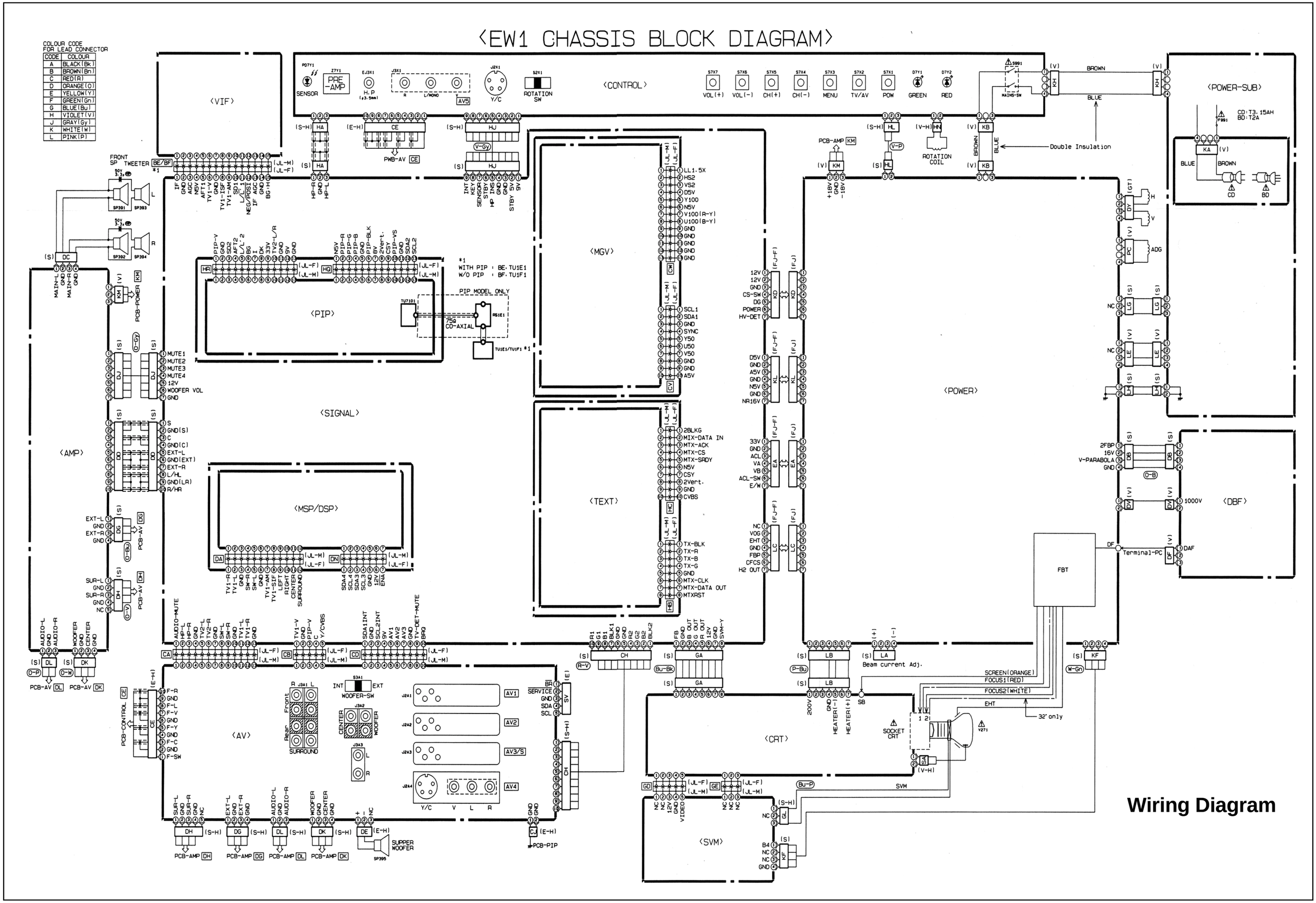
MITSUBISHI CT-32CW1BD